2.0 DESCRIPTION OF PROPOSED ACTION

The FERC is the federal agency responsible for authorizing applications to construct and operate onshore LNG import and interstate natural gas transmission facilities. The COE is responsible for issuing dredging and wetland permits for the project. The Coast Guard is responsible for determining the suitability of the waterway for LNG marine traffic. All of the cooperating agencies agree that the action to be studied in this EIS consists of NorthernStar's proposal to construct and operate an LNG import terminal at Bradwood and the related 36.3-mile-long natural gas sendout pipeline connecting the terminal with the Williams Northwest interstate pipeline system. In addition, the EIS will address the potential environmental impacts related to LNG marine traffic in the waterway from the outer limit of the United States territorial sea to the proposed LNG terminal location, including portions of the shoreline within the "Zones of Concern."[1] It will also analyze the environmental impacts associated with the construction and operation of associated nonjurisdictional facilities, including a 1.5-mile-long power line to the LNG terminal.

2.1 PROJECT COMPONENTS

NorthernStar proposes to construct and operate a new LNG import, storage, and vaporization terminal on the southern shore of the Columbia River at Bradwood, Oregon. In addition, NorthernStar proposes to construct and operate a new natural gas pipeline extending from the LNG terminal to an interconnection with the Williams Northwest pipeline north of Kelso, Washington. This project would allow LNG to be imported from areas with natural gas reserves throughout the world to the LNG terminal by ocean-going LNG ships. The LNG ships would enter United States territorial waters about 12 nautical miles (13.8 statute miles) off the coast of Oregon and proceed an additional 38 (statute) miles up the Columbia River to Bradwood. At the LNG terminal, the LNG ships would be berthed, LNG would be unloaded, stored, vaporized back into natural gas, and delivered to the sendout pipeline. NorthernStar's sendout pipeline would convey the natural gas to local users (at Wauna and Port Westward), the local distribution system of Northwest Natural, and the interstate grid through Williams Northwest pipeline system for transportation to markets throughout the Pacific Northwest. No expansions to the Northwest Natural distribution system or Williams Northwest pipeline system would be required to accommodate the new volumes of natural gas to be delivered by the proposed project.

Figure 2.1-1 illustrates the general location of the project. The text below describes LNG ships, the waterway to the LNG terminal, LNG terminal facilities, pipeline facilities, NorthernStar's proposed wetland and habitat mitigation sites, and NorthernStar's proposed SEI. Section 4 of this EIS will address specific environmental resources that may be potentially impacted by the construction and operation of the proposed facilities.

2.1.1 LNG Ships

There are currently 12 LNG exporting nations, which combined represent about 28 percent of the world's natural gas reserves. According to the FERC's regulations for applications under section 3 of the NGA, NorthernStar is not required to reveal market data about its LNG import terminal. NorthernStar has indicated that it expects to receive LNG shipments from countries around the Pacific Basin, and perhaps from the Middle East. LNG exporting countries in the Pacific Basin include Indonesia, Malaysia, and Australia. At this time, NorthernStar has not identified the specific sources of LNG supplies, or provided specific details about the LNG ships that would be used to transport the LNG from their source

[1] The "Zones of Concern" are described in Enclosure 11 of the Coast Guard's NVIC 05-05. These zones are based on the report *Guidance on Risk Analysis and Safety Implications of a Large Liquefied Natural Gas (LNG) Spill Over Water*, December 2004 (SAND2004-6258) prepared by the U.S. Department of Energy's Sandia National Laboratories. The Zones of Concern are more fully discussed in section 4.11 of this EIS.

Non-Internet Public

DRAFT ENVIRONMENTAL IMPACT STATEMENT FOR THE PROPOSED BRADWOOD LANDING PROJECT
Docket Nos. CP06-365-000, CP06-366-000, CP06-376-000, and CP06-377-000

Figure 2.1-1 General Project Location

Page 2-2

Public access for this Non-Internet information is available only through the Public Reference Room, or by e-mail at public.referenceroom@ferc.gov.

to the proposed LNG import terminal. NorthernStar has stated that it expects about 125 LNG carriers per year to unload cargos at its terminal, with LNG ships ranging in size from 100,000 to 200,000 m^3 in capacity. Because we do not know the point of origin of the LNG shipments, we cannot discuss any details about the trans-oceanic voyages of the LNG ships on their way to the Bradwood Landing LNG import terminal. The narrative below is general in natural, describing typical attributes of LNG ships. Additional information on LNG ship regulations and safety measures is presented in section 4.11.5.

Ships that transport LNG are specially designed to carry cold liquids for long distances. LNG ships combine features of conventional ship design with specialized materials and systems that can safely contain super-cooled liquids. There are currently about 218 LNG ships operating world-wide, ranging in capacity from 1,100 m^3 to 154,000 m^3 (LNG Express, 2007). A typical modern LNG ship would be about 975 feet long, with a beam of about 140 feet across, and a draft about 39 feet deep. Figures 2.1.1-1 and 2.1.1-2 illustrate typical LNG ships.

2.1.1.1 Profile

LNG ships have a distinctive appearance compared with other transport ships. An LNG ship has a high freeboard (i.e., that portion of the ship above water) when compared with vessels such as an oil tanker because of the comparatively low density of the cargo. Because of the high freeboard, wind velocity can adversely affect the maneuverability of the ship, particularly at slow speed, such as during docking.

2.1.1.2 Hull System

All LNG ships are constructed with double hulls, which increases the structural integrity of the hull system and provides protection for the cargo tanks in case of an accident. The space between the inner and outer hulls is used for water ballast. The segregated ballast tanks prevent ballast water from mixing with any residue in the cargo tanks. The International Maritime Organization's (IMO) Code for the Construction and Equipment of Ships Carrying Liquefied Gases in Bulk and Coast Guard regulations require that LNG ships meet a Type IIG standard of subdivision, damage stability, and cargo tank location.

The Type IIG design ensures an LNG ship could withstand flooding of any two adjacent compartments without any adverse effect upon the stability of the ship. Type IIG design also requires that the cargo tanks must be a minimum of 30 inches from the outer hull and a minimum distance above the bottom of the ship equal to the beam of the ship divided by 15, or 6.5 feet, whichever is less. This distance is intended to prevent damage to the cargo tanks in case of low energy-type accidents that might occur in harbors and during docking. Most large LNG ships have a distance of 10 to 15 feet between the outer hull and cargo tank.

2.1.1.3 Containment Systems

The LNG containment system on LNG ships consists principally of the cargo tank (sometimes called a primary barrier), the secondary barrier, and insulation. The containment system also includes cargo monitoring and control and safety systems.

Three basic tank designs have been developed for LNG cargo containment: prismatic free-standing, spherical, and membrane. The earliest form of LNG containment is the prismatic free-standing tank. It consists of an aluminum alloy or 9 percent nickel steel, self-supporting tank that is supported and restrained by the hull structure. Insulation consists of reinforced polyurethane foam on the bottom and the sides, with fiberglass on the top. The spherical tank design, also known as the Moss design, uses an

This information is for environmental review purposes only.

Figure 2.1.1-1
Bradwood Landing Project
LNG Vessel with Membrane Type Containment System

Typical Membrane Design for an LNG Vessel

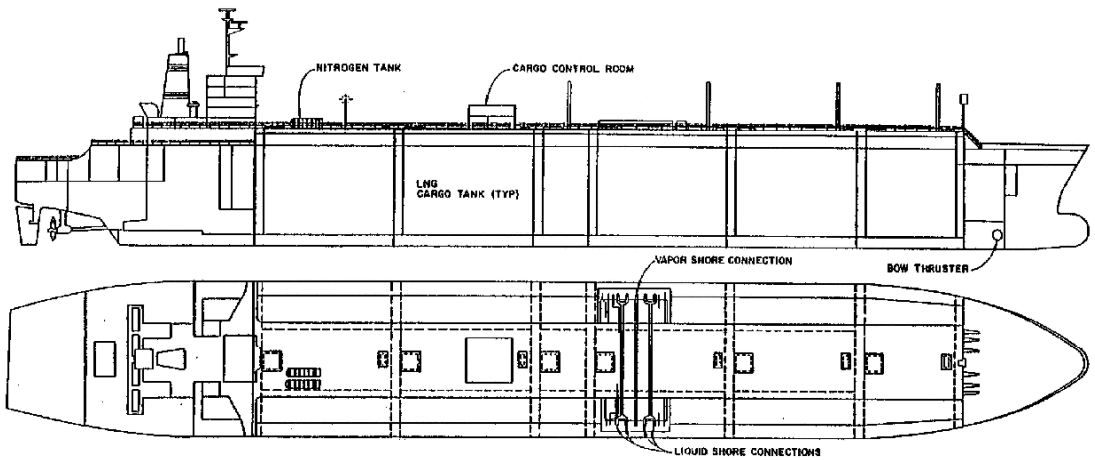

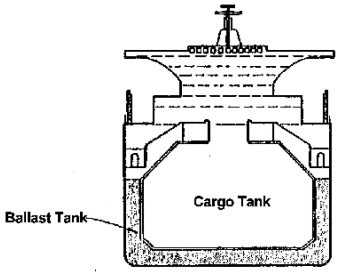

Tanker Characteristics

LNG Capacity	125,000 m^3	165,000 m^3
Length Overall	950 ft.	1,000 ft.
Beam	145 ft.	150 ft.
Hull Depth	82 ft.	100 ft.
Draft, Loaded	38 ft.	40 ft.
Displacement, Loaded	95,000 Long Tons	122,000 Long Tons

Typical Spherical Design for an LNG Vessel

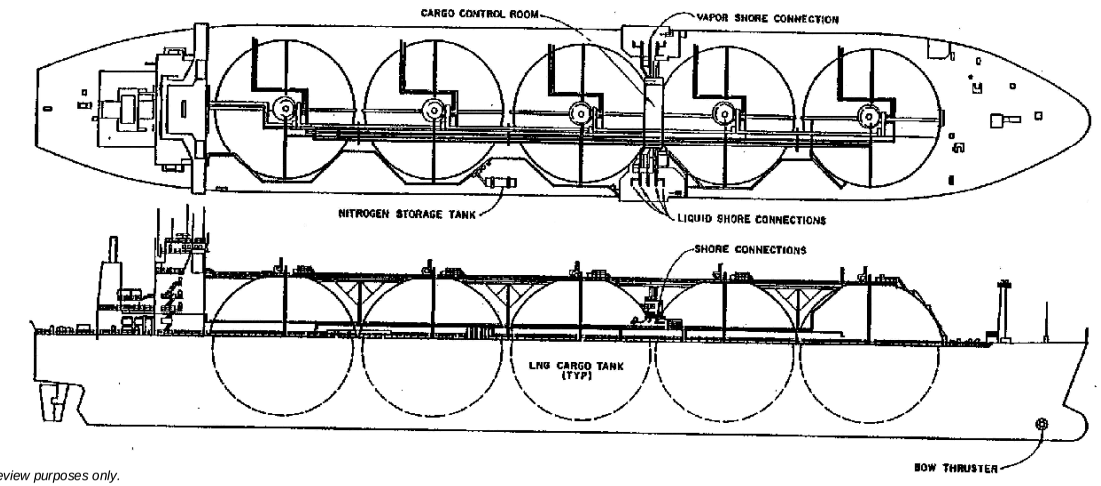

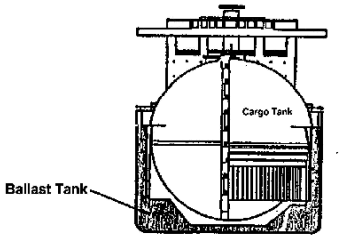

Tanker Characteristics

LNG Capacity	125,000 m^3	165,000 m^3
Length Overall	950 ft.	1,000 ft.
Beam	145 ft.	150 ft.
Hull Depth	82 ft.	100 ft.
Draft, Loaded	38 ft.	40 ft.
Displacement, Loaded	95,000 Long Tons	122,000 Long Tons

This information is for environmental review purposes only.

Figure 2.1.1-2
Bradwood Landing Project
Typical Designs for an LNG Vessel

unstiffened, spherical, aluminum alloy tank that is supported at its equator by a vertical cylindrical skirt, with the bottom of the skirt integrally welded to the ship's structure. This free-standing tank is insulated with multi-layer closed-cell polyurethane panels. In the membrane containment system, the membrane is supported by the inner hull through the insulation. Two forms of membrane are commonly used: the Technigaz membrane using stainless steel and the Gas-Transport membrane using Invar. An LNG ship with a membrane type containment system is shown on Figure 2.1.1-1. Figure 2.1.1-2 depicts typical spherical and membrane designs for LNG vessels.

2.1.1.4 Pressure/Temperature Control

A basic goal of all LNG containment systems is to maintain the LNG cargo at or near atmospheric pressure and at the boiling temperature of the LNG (about -260 °F). Any heat leak through the containment insulation results in vaporization of LNG, allowing the tank to remain at a constant temperature. The resultant vapor, referred to as BOG, is removed to maintain the tank pressure. The vapor ranges from 0.15 to 0.25 percent (by volume) per day and is used to supplement the bunker fuel in the ship's boilers. The Coast Guard does not permit routine venting of BOG to the atmosphere in the United States. Thus, all LNG ships that trade in the United States are fitted with an internalized combustion energy system that allows the ship's boiler to consume all of the BOG to fuel the ship's steam propulsion system. As a result, LNG ships have reduced emissions when compared with conventional oil-fired ships.

2.1.1.5 Ballast and Cooling Water

Sufficient ballast water capacity must be provided to permit the ship to return to the loading port safely under various sea conditions. LNG cargo tanks are not used as ballast tanks because these tanks remain at cryogenic temperatures and contain a minimal amount of LNG during the return voyage. Consequently, LNG ships must be designed to provide adequate ballast capacity in other locations.

Ballast water tanks are arranged within the LNG ship's double hull. To reduce the potential for leakage, the ballast tanks, cofferdams, and void spaces are typically coated to reduce corrosion. LNG ships are also periodically inspected to examine the coating and to renew it as necessary.

A ballast control system, which permits the simultaneous ballasting during cargo transfer operations, is also incorporated into each LNG ship. This allows the LNG ship to maintain a constant draft during all phases of its operation. Under normal operating conditions, ballast water would be taken onto the ship while the LNG ship is offloading at the LNG import terminal. Ballast water is typically only discharged during loading operations at the LNG export terminal or during mid-ocean ballast water exchanges during the transit from the import terminal to the export terminal. No ballast water would be discharged near the LNG import terminal.

Ships unloading at LNG terminals also need cooling water for the engines that generate electrical power for the offloading pumps and other onboard systems. A combined 20 to 50 million gallons of ballast and engine cooling water is typically taken on during LNG ship offloading operations. For the Bradwood Landing Project, NorthernStar would construct and install a system capable of delivering filtered river water to the LNG ships. This system would use a screened water intake located at the ship berth (see figure 2.1.3-3) that would avoid the entrainment and impingement of juvenile fish. The water supplied using this system would be used first to cool the engines and then would be used to fill the ballast tanks, thus minimizing the total water intake and avoiding discharge of warm water to the Columbia River. In rare instances when the ballast tanks fill before the need for shore-based cooling water is over, the ballast water would be circulated through the engines for cooling after the shore-based water supply is turned off, until the ship is ready to leave the wharf. NorthernStar has stated it would

offer contract incentives to the LNG suppliers to retrofit the LNG ships with the piping and equipment necessary to connect with the filtered water supply. The extent of the required modifications would vary depending on the age of the LNG ship and its type of propulsion (i.e., steam or diesel).

2.1.1.6 Ship Safety Systems

The LNG ships proposed for use in this project would need to comply with all federal and international standards regarding LNG shipping. As such, ships that transport LNG to the proposed import terminal would be fitted with an array of cargo monitoring and control systems. The systems include provisions for pressure monitoring and control, temperature monitoring of the cargo tanks and surrounding ballast tanks, emergency shutdown (ESD) of cargo pumps and closing of critical valves, monitoring of tank cargo levels, and gas and fire detection.

The ships that transport LNG to the terminal would be fitted with many navigation and communication systems, including:

- two separate marine radar systems, including automatic radar plotting and radio direction finders;
- LORAN-C receivers;
- echo depth finders; and
- a satellite navigation system.

All LNG ships also have redundant, independent steering control systems that are operable from the bridge or steering gear room to maintain rudder movement in case of a steering system failure.

2.1.1.7 Fire Protection

All LNG ships arriving at the proposed terminal would be constructed according to structural fire protection standards contained in the *International Convention for the Safety of Life at Sea* (SOLAS). This would be done under the review and approval procedures of the Coast Guard.

LNG ships using the terminal would also be fitted with active fire protection systems that meet or exceed design parameters in Coast Guard regulations and international standards, such as the *Code for the Construction and Equipment of Ships Carrying Liquefied Gases in Bulk* and SOLAS including:

- a water spray (deluge) system that covers the accommodation house and central room, and all main cargo control valves;
- a traditional fire suppression system that provides water to fire monitors on deck and to fire stations found throughout the ship;
- a dry powder extinguishing system for LNG fires; and
- a carbon dioxide (CO_2) system for protecting the machinery, ballast pump room, emergency generators, cargo compressors, etc.

2.1.1.8 Crew Qualifications and Training

All officers and crews of the LNG ships would comply with the *International Convention Standards of Training, Certification and Watch Keeping for Seafarers*. Key members of the crew must have specific training in the handling of LNG and the use of the safety equipment. Officers must receive simulator training in the handling of the ship and the cargo systems specific to the conditions at the project site. In addition, each LNG ship would enter the Columbia River under the navigational control of a Columbia River Bar Pilot. Upon transiting past the Astoria-Megler Bridge, a Columbia River Pilot would take navigational control from the Columbia River Bar Pilot.

2.1.1.9 Ship Selection

The specific identity of LNG ships that would unload at the terminal would depend on the commercial terms of the LNG purchase agreements. Transportation could be provided by either the LNG buyer or supplier. The different contractual arrangements for LNG transport can result in ships of different sizes and countries of origin being used to transport LNG to the project. The Coast Guard would restrict the size of the LNG ships operating on the Columbia River to a maximum cargo size of 148,000 m^3 until additional risk analyses addressing larger vessels have been completed (see section 4.11.5).

Ships using the terminal would comply with the Coast Guard regulations for LNG ships. This compliance is demonstrated by the operator of the LNG ship having proper certificates authorizing the transport of LNG as follows:

- United States Flag LNG Ship – The Coast Guard Certificate of Inspection (COI) must be valid and endorsed for the ship to transport LNG (46 CFR 154). A Coast Guard COI is issued for a period of 5 years and retention of the COI depends upon the continued maintenance of the vessel in a safe operating condition and satisfactory completion of required annual inspections during the 5-year COI period.

- Foreign Flag LNG Ship – The ship must have a valid Certificate of Compliance (COC) issued by the Coast Guard. The certificate is issued after the ship has proved that it complies with the Coast Guard regulations and after it has been satisfactorily inspected by a Coast Guard Marine Safety Office (46 CFR 154). A COC is valid for a 2-year period and remains valid pending satisfactory completion of an annual mid-period examination between certificate renewals.

Both United States and foreign flagships must be annually inspected by the Coast Guard and the flag state. Coast Guard officers from Sector Portland, Oregon would be responsible for boarding the LNG ships prior to the Columbia River Bar crossing to perform security inspections and to assure compliance with safety standards. NorthernStar would continually monitor ship unloading operations at the LNG terminal to ensure that the operations are according to their established procedures and to ensure that the ships are maintained to all standards.

2.1.2 Waterway for LNG Marine Traffic

The Coast Guard defines the waterway for LNG marine traffic for this project as extending from the outer limits of the United States territorial waters, 12 nautical miles off the coast of Oregon, and up the Columbia River about 38 miles to the proposed location of the Bradwood Landing LNG import terminal (see figure 2.1.2-1). The Columbia River has an existing dredged federal navigation channel all the way to Portland, Oregon. Improvements to the navigation channel have recently begun to increase the depth to 43 feet; these improvements are expected to be completed before the proposed LNG terminal

Non-Internet Public

DRAFT ENVIRONMENTAL IMPACT STATEMENT FOR THE PROPOSED BRADWOOD LANDING PROJECT
Docket Nos. CP06-365-000, CP06-366-000, CP06-376-000, and CP06-377-000

Figure 2.1.2-1 Waterway for LNG Marine Traffic

Page 2-9

Public access for this Non-Internet information is available only through the Public Reference Room, or by e-mail at public.referenceroom@ferc.gov.

would go into operation. The COE completed an EIS for its Columbia River dredging project in 1999, supplemented in 2003 (COE, 1999; 2003).

2.1.2.1 Waterway Characteristics

The Columbia River originates in British Columbia, Canada, and flows some 745 miles south and west to empty into the Pacific Ocean west of Astoria, Oregon. The federally-maintained navigation channel extends from the mouth up the Columbia River about 104 river miles to Portland, Oregon and Vancouver, Washington and also extends about 12 river miles up the Willamette River at Portland (Port of Portland, 2007a). Near its mouth (Columbia River Mile (CRM) 3) the navigation channel is 600 feet wide and 40 feet deep, as a result of a federal channel deepening project completed in 1976. Along its navigable route there are commercial ports at Astoria, St. Helens, and Portland, Oregon, and Longview, Woodland, Kalama, and Vancouver, Washington. The COE dredged about 28 miles of the Columbia River channel to 43 feet deep in 2005 (Port of Portland, 2007b). Recent navigation charts published by the COE indicate that water depths adjacent to the proposed LNG terminal site range from 22 feet to over 50 feet.

Tides

Average tides on the Columbia River range from 6.6 feet at Tongue Point, east of Astoria, Oregon to 3.3 feet at Longview, Washington. Tides are a specific consideration in scheduling the entry and exit of deep-draft ships into and out of the river. Downstream of CRM 40, ocean tides control surface water elevations, but river discharges have little effect.

Currents and Freshets

Currents at the Columbia River Bar can be significant, with sudden and unpredictable changes. Ebb currents on the north side of the bar attain velocities of 6 to 8 knots. In the entrance, the currents are variable, and at times reach a velocity of over 5 knots on the ebb; on the flood they seldom exceed a velocity of 4 knots. Ebb currents of 1 to 3 knots occur elsewhere in the river. The current velocity at the proposed LNG terminal is normally about 1 knot.

The current can increase considerably during freshets, the seasonal influence of river flow as continental snowfall melts and drains into the river. The annual high-water freshet stage occurs on the Columbia River in late May. The COE monitors river depth for possible bottom changes that might affect shipping. In addition, the Northwest River Forecast Center has six stage recording stations on the Columbia River to predict river stages up to 6 days in advance, for the use of pilots.

Weather and Ice

Incidents of rain and fog are greater at the mouth of the Columbia River. Winds are channeled by topography to follow the river. Wind direction is generally from the east through southeast in winter, and wind speeds reach 20 miles per hour or more about 5 to 10 percent of the time. Visibility is diminished by fog to below 0.5 mile about 3 to 6 days per month. Winds during the summer remain west to northwest and are typically light. Ice forms occasionally on the river but is seldom heavy enough to affect navigation.

2.1.2.2 Natural Hazards in the Waterway

The Columbia River Bar is located at the mouth of the Columbia River where the current dissipates into the Pacific Ocean, depositing sediments as the river slows. Characterized by the frequent

presence of large, standing waves, the Columbia River Bar is exposed to the full force of storm-generated swells and wind waves from winter weather off the Pacific Ocean. The large ocean waves are further accentuated by the fact that they are entering shallow water, and during ebb tides the opposing current builds them further into a standing wave that can approach 35 feet in height. These large swells present several dangers to ship traffic. If they are too large they can overpower the steering ability of the ship, making it impossible to control. In some circumstances the heavy seas that roll on deck create a hazard to structures and equipment. A deeply loaded ship can pitch and roll so heavily that striking the bottom in a trough becomes a concern. During storm conditions, the Columbia River Bar Pilots will not transit a vessel across the bar if conditions are unsafe.

Geographic hazards characterizing the local marine environment include shallows and shoaling in way of the approaches and vicinity of Lower and Upper Desdemona Shoals, Harrington Point Range, Miller Sands Range, Pillar Rock (Lower and Upper), Welch Island Reach, Skamokawa Channel, Steamboat Reach and Puget Island Range and Turn. Characteristics that contribute to natural hazards are largely a function of channel width and natural constraints (i.e., sand, rock, and depth) defining the lateral edges of the channel.

Bar pilots consider two factors relating to how physical conditions in the Lower Columbia River affect transit: 1) wave conditions at the river mouth, and 2) underkeel clearance in the channel between CRM 6 and 13, which is susceptible to shoaling. Safe conditions at the river mouth would be when waves are less then 10 feet high, a condition that exists about 95 percent of the time. Entrance to the channel would be closed to ships with drafts of 36 feet for about 960 hours per year based on wave forecasts. Ships with drafts deeper than 36 feet must schedule departure from upriver ports to arrive at Astoria during required tide conditions. About half of the 40-foot draft ships must delay departures to wait for suitable tide stages in the estuary.

The ports along the Columbia River are primarily protected from the high seas by topographical features and characteristics of the mouth of the river. Key features include Clatsop Spit on the south side of the mouth and Cape Disappointment on the north. Additional protection is offered on the south by the South Jetty. This jetty is a manmade artifice running generally westerly from Clatsop Spit for a distance of approximately 2 miles. Protection on the north side of the mouth is offered by the North Jetty, which is a manmade artifice running generally westerly from the southwestern tip of Cape Disappointment for a distance of approximately 0.5 mile. The protection from the high seas becomes apparent along the navigation channel southeast of CRM 5 and in the partially protected waterway more enclosed by Clatsop Spit and the Washington State coastline on the south and north, respectively.

2.1.2.3 Human-Created Obstructions in the Waterway

There is only one bridge across the Columbia River between its mouth and Bradwood. The Astoria-Megler Bridge along U.S. Highway 101 connects Astoria, Oregon with Point Ellice, Washington. The bridge is 4.1 miles long, and when completed in 1966, it was hailed as the longest continuous truss in the world. Over the navigation channel this bridge has an air clearance 205 feet high and 1,070 feet wide. No power lines cross over the river along the route to the proposed LNG terminal.

2.1.2.4 Aids to Navigation in the Waterway

There are two anchorages adjacent to Astoria, the Astoria North Anchorage and the Astoria South Anchorage. The anchorages are located on either side of the ship channel. Anchorages are used for temporarily locating ships before proceeding upstream or to sea. All designated anchorages are primarily used to accommodate ships over 200 feet in length. However, these anchorages would not be suitable for use by LNG ships. There is also a turning basin at Astoria.

The COE has installed fields of timber piles to control channel alignment for navigation and provide bank protection. The COE maintains 236 pile dike fields along the entire length of the Columbia River channel. In addition, the COE has used in-water dredged fill material to reduce the channel cross-section. Upstream of CRM 20, nearly half the shoreline of the channel is composed of dredged fill material. Dredged material has also been used by the COE to create islands to control channel alignment. These islands are usually protected by pile dike fields.

2.1.2.5 Current Marine Traffic on the Waterway

Currently, ships using the Columbia River transport both foreign and domestic cargoes. Exports include logs, lumber, forest products, grain, flour, chemicals, fruit, fish, general and containerized cargo, and general merchandise. Imports include coal, petroleum products, bulk salt, bulk cement, alumina, manufactured products, and general and containerized cargo. About 1,700 commercial ships were counted entering the Columbia River in 2003. Most commercial traffic would proceed past the proposed LNG terminal on their way to ports up river, with the exception of cruise ships that stop at Astoria during the summer.

The Columbia River is also visited by commercial and recreational fishing boats. An estimated 1,500 fishing boats use the Lower Columbia River in a year. Marinas serving boaters on the Lower Columbia are located at Hammond, Warrenton, and Astoria in Clatsop County, Oregon; Rainer in Columbia County, Oregon; Ilwaco in Pacific County, Washington; Cathlamet in Wahkiakum County, Washington, and Longview and Kalama in Cowlitz County, Washington.

2.1.2.6 Safety Measures Currently in Place for Existing Vessel Traffic

With the exception of recreational and fishing vessels, all ships over 100 feet in length moving up or down the Columbia River must be accompanied by a licensed pilot. Pilotage service is provided by the Columbia River Bar Pilots from the boarding area offshore to Astoria, and by the Columbia River Pilots for river transits east of Tongue Point.

2.1.2.7 Population Adjacent to the Waterway

The Warrenton/Astoria area in Clatsop County, Oregon, is the major population center along the LNG marine traffic route. In 2006, the population of Warrenton was estimated at 4,460, while about 9,970 people resided in Astoria. The majority of the shoreline along the LNG marine traffic route is rural, and sparsely populated. In Wahkiakum County, Washington, Cathlamet is the largest town, with a population estimated at 555 in 2006. About 800 people live on Puget Island.

2.1.2.8 Coast Guard Review of Waterway Suitability for LNG Marine Traffic

The Coast Guard is responsible for issuing an LOR regarding the suitability of the waterway for LNG marine traffic. Following the guidance in NVIC 05-05, NorthernStar produced a WSA that was reviewed and validated by the Coast Guard. During the validation process, the Coast Guard consulted with a variety of stakeholders, including state and local emergency responders, marine pilots, towing industry representatives, members of the Port Waterway Safety Committee, and the Area Maritime Security Committee. NorthernStar designated the WSA as Sensitive Security Information as defined in 49 CFR 1520. Because any unauthorized disclosure of these details could be employed to circumvent the proposed security measures, they are not releasable to the public, and the WSA is not a part of the FERC public record in this proceeding.

The Coast Guard issued its WSR for this project on February 28, 2007 (see Appendix H). The COTP indicated in the WSR that in order to make the Columbia River suitable for LNG marine traffic additional measures would be necessary to responsibly manage navigation, safety, and security risks. These measures are discussed in detail in section 4.11.5.4.

2.1.3 LNG Terminal Facilities

The LNG import terminal facilities would include a 58-acre ship maneuvering area in the Columbia River, ship berth and unloading facilities, two LNG storage tanks, vaporization and vapor handling systems, and support facilities. The terrestrial portion of the LNG terminal would occupy 40 acres of land within a 411-acre site controlled by NorthernStar. A layout of the proposed LNG terminal is provided on figure 2.1.3-1.

2.1.3.1 Maneuvering Area and Berth

The maneuvering area and turning basin would be approximately 2,000 feet by 2,000 feet in size, covering about 58 acres in the Columbia River off of the existing navigation channel northeast of Bradwood. At this point the navigation channel is 600 feet wide and 40 feet deep; however, the channel is in the process of being deepened to 43 feet by the COE. The final design for the maneuvering area and turning basin was adopted after NorthernStar considered the results of a vessel maneuvering simulation study conducted in 2005 at the COE Engineering Research and Development Center Ship and Tow Simulator in Vicksburg, Mississippi (Waterway Simulation Technology Inc. (WST), 2005).

In order to create the maneuvering area, NorthernStar would dredge approximately 700,000 cubic yards of sediments from the Columbia River bottom, allowing for a 1-foot overdredge to -43 feet Columbia River Datum (CRD) (see figure 2.1.3-2). Additional information on the dredging associated with the proposed project is presented in section 2.4.1.2.

The berth at the LNG terminal would be located about 1,200 feet away from the existing navigation channel in the Columbia River. It was designed to handle LNG ships with cargo capacities ranging from 100,000 to 200,000 m^3. The terminal would be capable of offloading one LNG ship at a time. NorthernStar anticipates that its terminal would be visited by about 125 LNG ships per year, with an average of 10 to 11 ships per month. Typically, it would take about 24 hours for an LNG ship to dock at the terminal, unload, and depart from the berth.

Maneuvering and docking of LNG ships would be accomplished with three 60-ton bollard pull Z-drive tugboats, which would be provided by NorthernStar. The WSR requires that all three tugs would remain in the turning basin while an LNG ship is unloading; either moored along side or tied to a nearby mooring dolphin.

The ship berth would be approximately 36 feet wide and 330 feet long and would extend into the Columbia River a total of about 300 feet from the shore to the outer edge of the unloading platform. Figures 2.1.3-3 and 2.1.3-4 depict a plan and cross section of the berth. The berth would include four breasting structures, six mooring dolphins, an unloading platform, and a pipeway/roadway trestle from the unloading platform to the shore. The platform would be constructed of reinforced concrete beams and slabs supported on steel piles. A control office would be located on the berth platform to monitor ship unloading operations, including a display screen to track the velocity and angle of approach of the LNG ship to the berth. Fiber-optic cable would connect the office instrument control system to the LNG ship's unloading control system.

Non-Internet Public

DRAFT ENVIRONMENTAL IMPACT STATEMENT FOR THE PROPOSED BRADWOOD LANDING PROJECT
Docket Nos. CP06-365-000, CP06-366-000, CP06-376-000, and CP06-377-000

Figure 2.1.3-1 Proposed LNG Terminal Layout

Page 2-14

Public access for this Non-Internet information is available only through the Public Reference Room, or by e-mail at public.referenceroom@ferc.gov.

Non-Internet Public

DRAFT ENVIRONMENTAL IMPACT STATEMENT FOR THE PROPOSED BRADWOOD LANDING PROJECT
Docket Nos. CP06-365-000, CP06-366-000, CP06-376-000, and CP06-377-000

Figure 2.1.3-2 Dredge Area

Page 2-15

Public access for this Non-Internet information is available only through the Public Reference Room, or by e-mail at public.referenceroom@ferc.gov.

Non-Internet Public

DRAFT ENVIRONMENTAL IMPACT STATEMENT FOR THE
PROPOSED BRADWOOD LANDING PROJECT
Docket Nos. CP06-365-000, CP06-366-000, CP06-376-000,
and CP06-377-000

Figure 2.1.3-3 Ship Berth Plan

Page 2-16

Public access for this Non-Internet information is available only through the Public Reference Room, or by e-mail at public.referenceroom@ferc.gov.

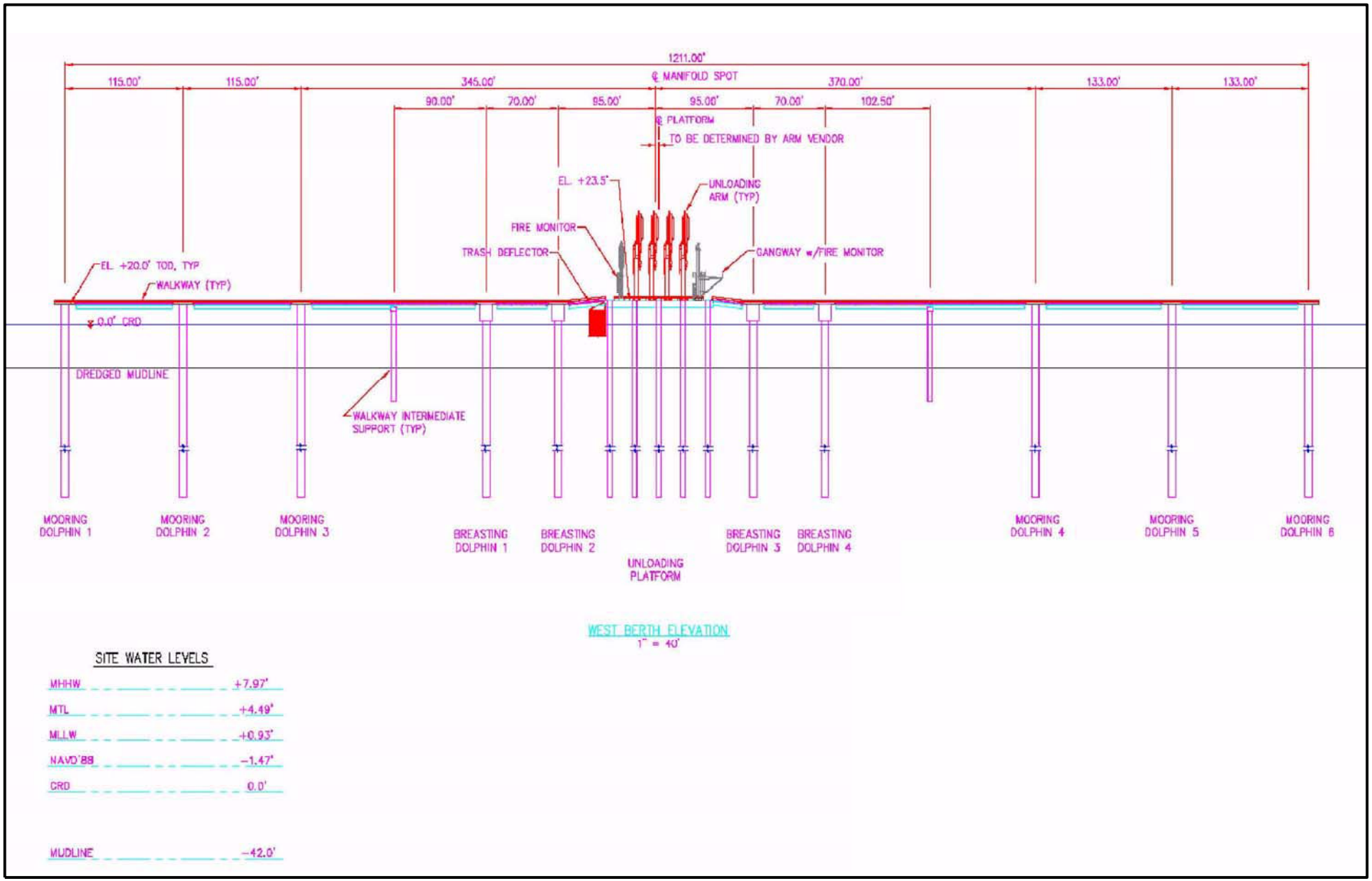

Figure 2.1.3-4
Bradwood Landing Project
Ship Berth Cross Section

The breasting structures and mooring dolphins would be constructed of steel pipe piles with concrete caps. The breasting structures would be equipped with fenders. Quick-release hooks would be provided on the mooring dolphins for the bow and stern breast lines to hold the LNG vessel onto the berth. The mooring hooks would have strain gauges that send data on mooring line tension to the berth control office. The extreme up and downriver mooring dolphins would have navigation lights marking the extent of the structure in the river. Other floodlighting at the berth would be angled downward and shielded, so as not to affect other vessel traffic in the navigation channel. Catwalks would connect the platform to the jetty head and to the mooring structures. Ladders would be installed on the mooring structures to provide access for small craft docking at the facility.

A small craft berth would be provided against the northwest mooring dolphin. The water around the berth is of sufficient depth to handle the shallow drafts of tugboats and other small service craft that may need to dock at the berth, so no additional dredging would be necessary in this area.

The jetty head would be a reinforced concrete beam structure, about 115 feet wide by 125 feet long, supported by steel pipe piles. The approachway would be about 20 feet wide, to permit a small mobile rubber-tired crane to transit to the unloading arms. The pipeway would be about 19 feet wide. Outside of the pipework, the deck of the approachway and jetty head would be sloped to allow storm-water to run off into the river. The pipework area would be curbed and underlain by a concrete trough to collect an LNG leak or spill and convey the liquid to an onshore spill containment pit.

Table 2.1.3-1 summarizes the location, number, length, diameter, and water depth of piles that would be used to construct the marine terminal.

TABLE 2.1.3-1

Pile Location, Number, Length, Diameter and Water Depth Summary

Location	Number of Piles	Length (feet)	Diameter (inches)	Approximate Water Depth (feet)
Mooring dolphins on the north	3	160	96	20
Mooring dolphins on the south	3	160	96	32-37
Breasting dolphins on the north	2	160	84	27
Breasting dolphins on the south	2	160	84	31
Platform	20	150	54	30
Trestle	9	150	54	3 or 22-25
Abutment	3	100	24	Onshore
Walkway support on the north from platform to dolphin	1	100	48	23
Walkway support on the north from mooring dolphin to shore	1	100	48	10
Walkway support on the south from platform to dolphin	1	100	48	32
Walkway support on the north from mooring dolphin to shore	1	100	48	2

2.1.3.2 Unloading and Transfer Facilities

Once berthed, pumps onboard the LNG ship would deliver LNG through unloading arms and transfer pipelines to the onshore LNG storage tanks. Dockside personnel would connect the unloading arms to the ship manifolds. Cool-down of the unloading arms would be started by introducing a small LNG flow, either using a bypass line around the discharge of one of the ship's pumps or using a dedicated small capacity pump on the ship, through the unloading arms and into the ship berth KO drum.

The unloading platform at the ship berth would include four 16-inch-diameter cryogenic marine unloading arms. Two of the arms would be dedicated for unloading LNG to the transfer pipelines, one would be for vapor return to the LNG ship, and one would be a hybrid arm usually used for unloading but also capable of returning vapor as a backup. Each unloading arm would be fitted with powered emergency release coupling valves to isolate the arm and the ship in the event of a non-scheduled separation and to minimize LNG spillage. Each arm would be operated by a hydraulic system and a counterbalance weight would be provided to reduce the deadweight of the arm on the shipside connection and to reduce the power required to maneuver the arm into position.

The berth and unloading facilities would be designed in accordance with applicable codes and standards, including but not limited to the Oil Companies International Marine Forum, Society of International Gas Tanker and Terminal Operators, International Navigation Association, American Petroleum Institute (API), and American Society of Civil Engineers, to ensure the safe transfer of LNG from the ships to the onshore storage tanks. The LNG unloading rate would be controlled from the ship. The unloading arms would have a combined unloading rate capacity of 12,000 m^3/hour (52,834 gallons per minute (gpm)). It would take about 14 hours to unload a 160,000 m^3 capacity LNG ship.

LNG would be transferred via the unloading arms from the ship at berth to the LNG storage tanks onshore by cryogenic pipelines that run from the unloading platform down the approachway to the jetty head. The transfer pipeline system would be composed of a 32-inch-diameter LNG unloading line and a 6-inch-diameter LNG recirculation cool-down line. These pipelines would be approximately 800-feet-long from the unloading manifold to the point where the 32-inch-diameter unloading line would divide. One branch of the unloading line would proceed southwest for 40 feet to connect to the western storage tank, while the other branch of the unloading line would continue an additional 440 feet to the eastern storage tank. The 6-inch-diameter cool-down line would recirculate LNG from the send-out pumps to the unloading arms and back to the process area. This system would keep the transfer pipelines cold during periods when an LNG ship is not being unloaded.

An LNG sampling package would be installed on the unloading line to allow for sampling and analysis of the composition of the LNG. The transfer line coming off the jetty would also be equipped with emergency isolation valves.

2.1.3.3 Vapor Handling System

The pressure in the LNG ship during unloading would be maintained through a system that allows vapor to flow back from the storage tanks to the ship. A desuperheater would be installed on the jetty to control the temperature of the vapor returned to the ship to about -220 °F by injecting LNG into the vapor via the jetty transfer line. A vapor return KO drum would also be located on the jetty, to prevent liquid slugs downstream of the desuperheater and act as a drain pot for the unloading arms. Once unloading activities are completed, but before recirculation, LNG would be drained from the unloading arms to the vapor return KO drum and back to the LNG ship by pressuring with gaseous nitrogen. After the LNG ship has disconnected, the vapor return KO drum would be drained into the unloading line.

Ambient heat input into the LNG storage tanks would result in vaporization of LNG, allowing the tank to remain at a constant temperature. The resultant vapor, referred to as BOG, is removed by the vapor handling system to maintain the tank pressure. During unloading operations, BOG would be displaced by LNG entering the tanks and would need to be removed.

The BOG vapor handling system would consist of pipework, compressors, and a condenser. A vapor return line would convey vapor displaced from the storage tanks back to the LNG ship. A pressure control valve on the line would maintain the required pressure at the vapor return arm.

The terminal design includes two 50-percent reciprocating BOG compressors. The BOG compressors are sized for a maximum capacity of 7.68 million cubic feet per day (MMcfd). The compressors would operate in a duty/standby arrangement. The purpose of the BOG compressors is to raise the BOG pressure to a level at which the BOG could be condensed by the BOG condenser. The BOG compressors would also serve to control storage tank pressure during LNG ship off-loading and during periods of low sendout. A desuperheater would be installed on the BOG compressor suction line to ensure that temperatures are kept below -250 °F. A KO drum would be provided on the BOG compressor suction to separate any injected liquid that is not vaporized in the compressor suction flow.

The BOG condenser would serve two functions: it would condense BOG into LNG and it would provide buffer capacity to the sendout pumps. The upper section of the condenser would include pressure control valves that would allow excess pressure to be vented or "padding gas" to return from the sendout line. The lower portion would produce buffer liquid for the send-out pumps, sized for a send-out rate of 1,500 MMcfd. Under normal operating conditions most of the LNG would by-pass the BOG condenser, but when sendout is at a minimum almost all the LNG would be routed through the top of the BOG condenser.

The terminal would contain one ignitable vent stack. The BOG header would be protected by a pressure controller, which would allow relief to the process vent, if required. Under normal operations, only inert purge gas (nitrogen) would be vented. The vent is designed for a maximum rate of 68,670 pounds per hour.

2.1.3.4 LNG Storage Tanks

LNG unloaded from the ships would be stored in two 160,000-m^3 (1,006,000 barrel) full-containment storage tanks at a temperature of -260 °F and maximum internal pressure of 4.2 pounds per square inch gauge (psig). These would be on-ground type tanks, built on a reinforced concrete slab supported on a piled foundation, with base heating systems to prevent frost heave. Each storage tank would have a 9 percent nickel-steel inner container and a secondary pre-stressed concrete outer container, a reinforced concrete domed roof, a reinforced concrete outer container bottom, and an aluminum insulated support deck suspended from the outer container roof over the inner container. Each storage tank would be designed so that both the primary and secondary containers could both independently contain LNG. The diameter of the outer containers would be approximately 254 feet and the height to the top of the storage tank domes would be approximately 135 feet. Figure 2.1.3-5 shows the conceptual design of NorthernStar's proposed storage tanks.

The load-bearing insulation beneath the inner container would consist of cellular glass. The space between the inner container and the outer container would be filled with expanded perlite insulation compacted to reduce long-term settling. The outer concrete container would be lined on the inside with carbon steel plates, as a barrier to moisture migration from the atmosphere reaching the insulation inside the outer container. This liner would also prevent vapor from escaping from inside the tank during normal operations. The storage tanks would meet the requirements of National Fire Protection Association (NFPA) 59A and 49 CFR 193. The inner container would be designed and constructed according to the requirements of API Standard 620. There would be no penetrations through the sidewalls or bottoms of the storage tanks. All piping into and out of the tanks would be from the top. There would be two fill lines on the roof of each tank.

Each storage tank would be equipped with three vertical submerged in-tank LNG pumps (six total). The in-tank LNG pumps would each have a capacity of 2,353 gpm at 145 psig. At the normal sendout rate, four pumps (two pumps per tank) would operate (leaving one spare pump for backup in each tank). The in-tank pumps would move LNG through the BOG condenser or the bypass and on to the sendout pumps.

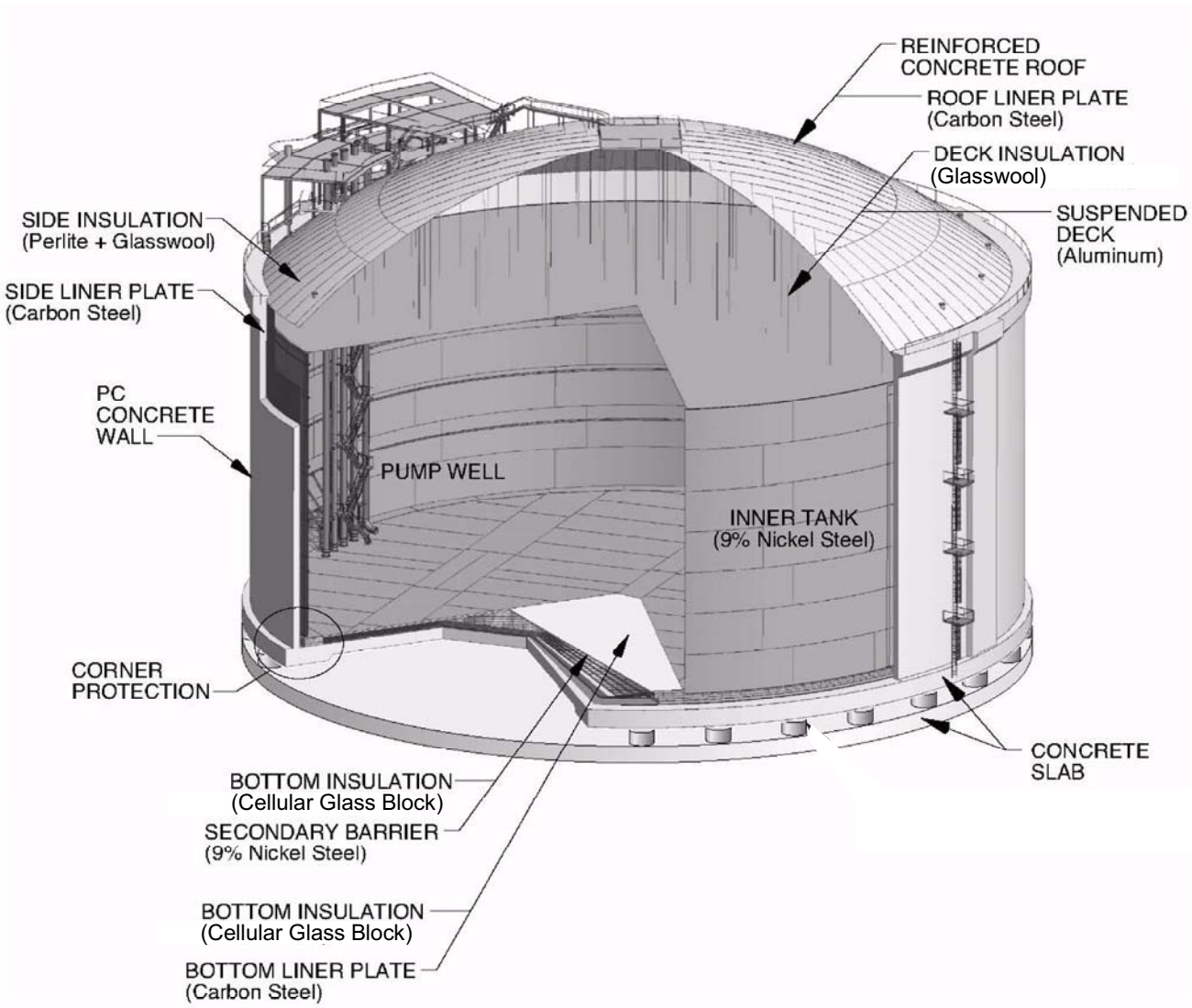

Figure 2.1.3-5
Bradwood Landing Project
Conceptual Design of LNG Storage Tanks

2.1.3.5 Vaporization System

The five sendout pumps would take their feed from the BOG condenser outlet or the bypass line. During normal discharge, four sendout pumps would operate (with one as a back-up spare), each with a capacity of 2,398 gpm. The sendout pumps would discharge LNG to the vaporizers at a pressure of 1,320 psig.

The terminal would have seven SCVs, arranged in parallel, to re-gasify the LNG. Only six of the SCVs would operate under the nominal sendout rate of 1.0 Bcfd. With all seven SCVs in operation, the facility would have a peak sendout capacity of 1.3 Bcfd.

Within the SCVs, the LNG would pass through a warm water bath in high-pressure tubing, and be converted to a gaseous state. NorthernStar would use its on-site well to provide about 0.2 million gallons of water for the initial filling of the SCVs. Sendout gas would be burned to heat the water in the SCVs. The SCVs would operate at a pressure of about 1,291 psig. The natural gas produced would be at about 40 °F at sendout from the SCVs.

During normal operations, the SCVs would generate about 160 gpm of condensate water. Excess water produced by the SCVs would pass to an overflow effluent pit where the hydrogen ion concentration (pH) of the water would be neutralized with alkaline chemicals. From the effluent pit, the SCV overflow water would be discharged into the Columbia River via a diffusion pipe.

2.1.3.6 Support Facilities

Buildings

The LNG terminal would include the following on-site service buildings:

- administration/warehouse;
- control;
- instrument air package shelter;
- switchrooms;
- power factor correction room;
- compressor building;
- jetty control/switch room;
- gatehouse/security building; and
- firewater pumphouse.

Pipe Racks

Pipe racks supporting LNG piping would be of reinforced concrete construction. Piping would be of welded steel.

Fuel Gas System

A system would be installed to supply and distribute natural gas as required to the fuel burning equipment at the LNG terminal. The primary source of natural gas for the fuel system would be recompressed BOG recovered from the LNG storage tanks. The fuel system would operate at a nominal pressure of 35 psig and would supply natural gas to be burned to warm the water bath within the SCVs.

Nitrogen System

Nitrogen would be used during terminal start-up to purge the LNG storage tanks, process equipment, and piping. A nitrogen system would be installed at the LNG terminal to service the unloading arms and vapor return system.

Electrical System

The electricity for the LNG terminal would be supplied from the external grid of the local utility company (see section 2.2.1). A 1.5-mile-long 115-kV overhead electric line would connect the terminal to the existing Bonneville Power Administration (BPA) system. A new electric switch yard and substation would need to be built within the Bradwood Landing LNG terminal site. NorthernStar would also install an 800 kW diesel-powered standby generator to provide backup power for critical loads. This generator would provide service to instrumentation, air compressors, and plant lighting. The generator would be started using an electrical starter powered by a battery. In addition, there would be dual redundant uninterruptible power supplies (UPS) using static batteries and backup batteries located in separate specially designed battery rooms throughout the terminal in case of a power outage. UPS systems would be put into the plant control room and on the jetty. Electrical equipment would comply with the appropriate electrical area classifications as defined in NFPA 59A *Standards for the Production, Storage, and Handling of LNG* (NFPA 59A). A plant grounding system would be installed according to applicable industry standards, such as the Institute of Electrical and Electronics Engineers Standard 142.

Lighting

Exterior lighting would be provided at the terminal using high-pressure sodium type bulbs. Lighting fixtures would be installed on building exteriors, at the jetty, on the tank stairways and roof platforms, in the process area, and along the access roadway.

Water System and Wastewater Management

Non-potable water for construction and operational activities would be obtained from an on-site water well (see figure 2.1.3-2). During the 3-year construction period, NorthernStar estimates that a total of about 12.3 million gallons of groundwater from that well would be used for concrete making, initial testing of SCVs, hydrostatic testing of piping, equipment/vehicle washing, and personal/sanitary use. During operation of the LNG terminal, about 1.1 million gallons of groundwater would be used annually for landscape irrigation and personal/sanitary use. Bottled, potable water would be delivered to the terminal for operational staff use. Section 4.3.1 discusses the use of groundwater and potential project-related groundwater impacts.

Because most of the LNG terminal site would remain unpaved, stormwater would either directly infiltrate into the ground or would be collected in shallow infiltration ditches and routed to unlined settling ponds for infiltration into the ground. The stormwater retention ponds would be large enough to hold the volume of runoff generated from a 100-year storm. Stormwater within the tertiary earthen berm surrounding the LNG storage tanks would be collected via swales and open channels and directed to spill impoundment basins. Water collected in the spill impoundment basins would be pumped into drainage wells by the impoundment basin sump pumps, sized for a 10-year storm event. Stormwater management is discussed in further detail in sections 4.3.1 and 4.3.2. Sanitary wastewater from the LNG terminal would be treated and disposed of using an underground, on-site septic tank and drainfield, or other permitted treatment system if final site conditions are not suitable for a drainfield.

During construction of the terminal, about 75 million gallons of water from the Columbia River would be used for hydrostatic testing and ground improvements. During operation of the terminal, the fire suppression system would be tested weekly, and use about 4,400 gpm of water for about 1 hour for each test. Surface water use at the terminal and potential impacts are discussed in section 4.3.2.3.

All intakes at the proposed LNG terminal that withdraw water from the Columbia River would be screened in accordance with the NMFS and ODFW requirements. Intakes for hydrostatic test water may be temporary pump locations, which would be screened to comply with intake velocity and mesh requirements. Permanent intakes, such as fire suppression water, would be fitted with custom-sized screens to avoid entrainment or impingement of larval and juvenile fish. The screens would be cylindrical, with one closed end pointed upstream and the screens on the side of the cylinder. The screens would be kept free of debris by periodic backflushing with compressed air. Water intake locations are shown on figure 2.1.3-3.

Water used for hydrostatic testing and testing of the fire suppression system would be returned to the Columbia River. Condensate from the vaporizers would be discharged to the Columbia River from a subsurface outfall/diffuser mounted on the dock at a maximum rate of 160 gpm. Water discharge locations at the terminal are shown on figure 2.1.3-3.

Natural Gas Sendout Facilities

As described further in section 2.1.4, the LNG terminal would have facilities associated with the natural gas sendout pipeline, including a meter station, MLV, and pig launcher.

Safety and Security Systems

The proposed LNG terminal would include a fire detection and protection system, including automated detection of an LNG leak or spill, and LNG or non-process electrically started fires, fire suppression water, fire control equipment, fire proofing, and means of de-pressurizing an LNG ship at dock. The fire protection system would include a fire water main capable of serving hydrants, the jetty spray curtain, and individual spray equipment; high expansion foam available at the spill impoundment basins; automatic dry chemical extinguishers at the relief valve discharge piping; and portable fire extinguishers located throughout the terminal.

The terminal is located within a 411-acre parcel to be acquired by NorthernStar. The terminal would be surrounded by a security fence, with appropriate lighting. Access into and out of the facility would be controlled through a gatehouse, and limited again at the wharf.

Access Road and Hunt Creek Bridge

An existing 1,150-foot-long, privately-owned gravel access road (Bradwood Road) enters the LNG terminal site from Clifton Road over a bridge that crosses Hunt Creek. NorthernStar would need to pave and widen Bradwood Road for use during construction and operation of the proposed project. In addition, NorthernStar would replace the existing bridge over Hunt Creek because it is not adequate to withstand the anticipated vehicle loads associated with construction of the project.

NorthernStar would provide a parking lot for construction workers at the intersection of Clifton Road and Highway 30, and proposes to bus workers into the LNG terminal. Access for workers and construction equipment from Highway 30 would be by way of existing county-maintained paved two-lane Clifton Road, for 2.2 miles to Bradwood Road. Significant improvements cannot be made to Clifton Road due to the steep slopes. However, a traffic study conducted by a consultant to NorthernStar

recommended some minor improvements that could be made to the road to reduce impacts on local traffic. NorthernStar suggested one-way traffic for equipment during project construction. We recommend that NorthernStar develop a traffic management plan, in consultation with Clatsop County and the ODOT. See section 4.8.2.7 for a further discussion of transportation and traffic to the LNG terminal.

Railroad Relocation

There are existing train tracks within the proposed Bradwood Landing LNG terminal parcel. These tracks are operated by Portland & Western Railroad, Inc. (PWRR), on a right-of-way owned by the Oregon Department of Transportation (ODOT). No regularly scheduled trains currently run along the portion of this railroad through the Bradwood Landing terminal site. NorthernStar proposes to remove about a 4,200-foot-long section of the railroad through its parcel and relocate it up to 250 feet south of the present location of the tracks, and has entered into an agreement with PWRR and ODOT for this action.

2.1.4 Pipeline and Associated Aboveground Facilities

The Bradwood Landing Project would include construction and operation of an underground welded steel natural gas sendout pipeline and associated aboveground facilities. These facilities, including interconnects, meter stations, MLVs, and pig launchers and receivers, are shown on detailed maps contained in Appendix B.

2.1.4.1 Sendout Pipeline

A 36.3-mile-long sendout pipeline would extend from the LNG terminal at Bradwood, Oregon to an interconnection with Williams Northwest pipeline system north of Kelso, Washington. The pipeline would consist of about 18.9 miles of 36-inch-diameter pipe and 17.4 miles of 30-inch-diameter pipe (see table 2.1.4-1). The pipeline would be made of API SL-X-70 strength carbon steel, with a maximum allowable operating pressure of 1,280 psig. For the 36-inch-diameter pipe, the wall thickness would be 0.550-inch for Class 1 and 2 locations and 0.659-inch for Class 3 locations. For the 30-inch-diameter pipe, the wall thickness would be 0.458-inch for Class 1 and 2 locations and 0.550-inch for Class 3 locations. Section 4.11.9 explains these classifications in more detail.

TABLE 2.1.4-1

Pipeline Facilities Associated with the Bradwood Landing Project

Facility	Pipe Diameter (inches)	MP Range	Length (miles)	County, State
Natural Gas Sendout Pipeline	36	0.0 – 6.2	6.2	Clatsop, Oregon
		6.2 – 18.9	12.7	Columbia, Oregon
Subtotal			18.9	
	30	18.9 – 19.4	0.5	Columbia, Oregon
		19.4 – 36.3	16.9	Cowlitz, Washington
Subtotal			17.4	
Project Total			36.3	

The pipeline would originate at a pig launcher and meter station within the Bradwood Landing LNG terminal tract. The pipeline would exit the LNG terminal to the south, using horizontal directional drill (HDD) methods between mileposts (MP) 0.1 to 1.3 to pass under cliffs fronting the Columbia River, then proceed southwest of the Wauna Mill near MP 3.0, and easterly to the north of the community of Westport at about MP 6.0. The pipeline would cross through the alluvial plain lowlands adjacent to the

southern shore of the Columbia River from Westport to Port Westward at about MP 18.0 in Columbia County, Oregon. HDD methods would be used to install the pipeline under the Columbia River from Port Westward, with the exit point on a hillside between the mouths of Mill Creek and Abernathy Creek at about MP 19.8 in Cowlitz County, Washington. From Bunker Hill, the pipeline would continue easterly, passing south of Eufaula Heights at about MP 26.0, generally following the route of the existing Kelso Beaver Pipeline (KB Pipeline) where practical. North of the community of Lexington, HDD methods would be used to cross under Highway 411 and the Cowlitz River at about MP 34.0. The pipeline would cross under the railroad and Interstate Highway 5 (using the HDD method), north of the community of Ostrander at about MP 35.5, and terminate at a new meter station to be constructed adjacent to the existing Williams Northwest pipeline system.

2.1.4.2 Aboveground Facilities

The aboveground facilities would consist of a sendout meter station, four interconnects with meter stations, six MLVs, two pig launchers, and two pig receivers. No compression is planned for the proposed pipeline because the pressure of the natural gas exiting the LNG terminal would be sufficient to overcome line losses and meet the interconnection and delivery point requirements. Table 2.1.4-2 lists the proposed aboveground facilities.

TABLE 2.1.4-2

Aboveground Facilities Associated with the Pipeline for the Bradwood Landing Project

Facility	Approximate MP	Associated and/or Collocated Facility	County, State
Meter Station			
Sendout Meter Station	0.0	LNG terminal, MLV, pig launcher	Clatsop, Oregon
Interconnects/Meter Stations			
Georgia-Pacific Wauna Mill Delivery Point	3.7	Not Applicable (NA)	Clatsop, Oregon
Northwest Natural Pipeline Interconnect	11.4	NA	Columbia, Oregon
PGE Beaver Power Plant Delivery Point	18.9	NA	Columbia, Oregon
Williams Northwest Pipeline Interconnect	36.3	MLV, pig receiver	Cowlitz, Washington
MLVs			
MLV #1	0.0	LNG terminal, pig launcher	Clatsop, Oregon
MLV #2	3.7	NA	Clatsop, Oregon
MLV #3	18.8	Pig receiver, pig launcher	Columbia, Oregon
MLV #4	26.3	NA	Cowlitz, Washington
MLV #5	31.7	NA	Cowlitz, Washington
MLV #6	36.3	Williams Northwest Pipeline Interconnect, pig receiver	Cowlitz, Washington
Pig Launchers and Receivers			
Pig Launcher	0.0	LNG terminal, MLV	Clatsop, Oregon
Pig Receiver	18.8	Pig launcher, MLV	Columbia, Oregon
Pig Launcher	18.8	Pig receiver, MLV	Columbia, Oregon
Pig Receiver	36.3	Williams Northwest Pipeline Interconnect, MLV	Cowlitz, Washington

Sendout Meter Station

A sendout meter station would be located at MP 0.0 within the LNG terminal. This facility would be used to meter and sample natural gas after it leaves the vaporizers and before it is sent to the

sendout pipeline. The meter station would include two meter runs, consisting of a custody-transfer flow meter, a pressure regulator, isolation block valves, and associated instrumentation and controls. Similar to other interstate pipelines in the region, the natural gas would not be odorized before it is sent to the sendout pipeline.

Interconnects/Meter Stations

At MP 11.4, in Columbia County, Oregon, NorthernStar's pipeline would interconnect with Northwest Natural's existing bidirectional intrastate pipeline facilities capable of transporting gas to Northwest Natural's Mist underground natural gas storage facility. NorthernStar's pipeline would interconnect with Williams Northwest existing interstate pipeline facilities at the terminus of the pipeline at about MP 36.3, in Cowlitz County, Washington. NorthernStar also proposes to construct interconnects at two delivery points, at MP 3.7 (Wauna Mill) in Clatsop County, Oregon, and at MP 18.9 (PGE Beaver Power Plant) in Columbia County, Oregon.

Meter stations, consisting of a custody-transfer flow meter, a pressure regulator, isolation block valves, and all associated instrumentation and controls, would be installed at each interconnect and delivery point to measure the flow of natural gas from NorthernStar's pipeline to the downstream entity. Each interconnect and delivery point would consist of one or more meter runs located inside fenced and gated sites. Permanent entrance drives would be installed from existing roads to the proposed facilities.

Mainline Block Valves

Aboveground pipeline MLVs would be installed at MP 0.0 at the LNG terminal and at the terminus of the pipeline at MP 36.3 where it interconnects with the Williams Northwest facilities. An MLV would also be installed where the pipeline transitions from 36 inches in diameter to 30 inches in diameter at MP 18.8. Intermediate MLVs would be installed at MPs 3.7, 26.3, and 31.7. The MLVs would isolate pipeline segments from the rest of the system in order to contain unplanned pipeline system releases and to provide controlled venting during a planned pipeline system blow-down. The MLVs would be remotely operated and monitored. All MLVs would be installed in accordance with DOT safety requirements based on area population classifications.

Pig Launchers and Receivers

A pig launcher would be installed at MP 0.0 at the LNG terminal. A pig launcher and receiver would be installed where the pipeline transitions from 36 inches in diameter to 30 inches in diameter at MP 18.8. A pig receiver would be installed at the Williams Northwest interconnect at MP 36.3. These facilities would allow monitoring of the pipeline using internal inspection tools.

2.1.5 Wetland and Habitat Mitigation Sites

In order to compensate for temporary or permanent impacts on wetlands, wildlife habitats, and salmonid habitats that could not otherwise be mitigated, NorthernStar produced a preliminary Mitigation Plan, with the latest version filed on March 2, 2007. A copy of that Mitigation Plan is attached as Appendix G. Wetland impacts and mitigation are discussed in section 4.4.1 and terrestrial habitat impacts and mitigation are discussed in sections 4.4.2 and 4.5. NorthernStar proposes to acquire property at Svensen Island and Petersen Point and preserve or enhance habitat at those locations. NorthernStar would also preserve and enhance about 62 acres at the mouth of Hunt Creek within the 411-acre parcel it controls at the Bradwood Landing terminal site as an additional wetland and habitat mitigation site. The compensatory mitigation sites were identified only after all other forms of impact mitigation (i.e., avoidance, minimization, rectification, and reduction) were considered and, when appropriate, implemented. In developing these sites, it was NorthernStar's intent to provide an overall net benefit to

the environment of the lower Columbia River ecosystem. The locations of the sites are illustrated on figure 2.1.5-1, and they are described in greater detail in sections 4.4.1 and 4.5.

2.1.6 Palomar Pipeline

In a filing with the Security and Exchange Commission, NorthernStar indicated that it is seeking capacity on the Palomar Gas Transmission pipeline project (Palomar). Palomar is a project proposed by TransCanada's Gas Transmission Northwest (GTN) and Northwest Natural. On September 25, 2006, GTN and Northwest Natural announced that they would be holding an open season for capacity on the Palomar pipeline. On June 27, 2007, representatives of Palomar came to the FERC to make a Pre-filing presentation to staff. At that meeting it was stated that Palomar intended to request the initiation of the FERC's Pre-filing review process in the near future. However, as of the date of the writing of this draft EIS, Palomar has not yet submitted its formal request to initiate the Pre-filing process with the FERC.

Palomar proposes to construct and operate a 220-mile-long, 36-inch-diameter, bidirectional pipeline. The pipeline would begin at GTN's existing interstate pipeline system near Madras, Oregon, and provide service to the Portland metropolitan area through an interconnection with Northwest Natural's intrastate local distribution system near Molalla, Oregon. Palomar also is considering an interconnection with Williams Northwest at Molalla. The Palomar pipeline would then proceed northwest to interconnect with Northwest Natural's existing storage field at Mist. From Mist, the Palomar pipeline could branch off to serve the proposed Bradwood Landing LNG import terminal. The Palomar pipeline represents a second pipeline that could serve the Bradwood Landing LNG terminal, but it would not replace the 36-mile-long sendout pipeline proposed by NorthernStar that is discussed in this EIS.

Palomar indicated that its project is not dependent upon the authorization or construction of the Bradwood Landing Project. If the Bradwood Landing Project is not authorized, or not built, Palomar could still serve the Portland metropolitan area, and extend its pipeline out to Northwest Natural's Mist storage field. Palomar would just not build the last segment between Mist and Bradwood Landing. Nor is the Bradwood Landing Project in any way dependent upon Palomar. NorthernStar has proposed its own natural gas sendout pipeline, analyzed in this document, which would connect the Bradwood Landing LNG terminal with the interstate pipeline grid through an interconnection with Williams Northwest pipeline near Kelso, Washington. Should Palomar file an application with the FERC, we would conduct an independent environmental analysis of that pipeline project, and produce a separate, stand-alone environmental document to satisfy the NEPA under the new docket number.

2.2 NONJURISDICTIONAL FACILITIES AND INTERRELATED ACTIVITIES

In addition to the facilities discussed in section 2.1, the Bradwood Landing Project would require construction of facilities that do not fall under the Commission's jurisdiction. These include electric transmission facilities and three lateral pipelines. Although these facilities are not regulated by the FERC, they are related to the project and their potential environmental impacts are considered in this EIS.

Another action not directly regulated by the FERC is NorthernStar's proposed SEI. We consider the SEI to be an interrelated and interdependent action, and therefore it is discussed below.

2.2.1 Power Line

As previously mentioned, the electricity for the LNG terminal would be supplied from the external grid of the local utility company. A 1.5-mile-long 115 kV power line would be constructed on a 105-foot-wide right-of-way to bring 25 megawatts (MW) of power to operate the LNG terminal (see figure 2.2.1-1). The power line would interconnect with the existing (BPA) system and would be

Non-Internet Public

DRAFT ENVIRONMENTAL IMPACT STATEMENT FOR THE PROPOSED BRADWOOD LANDING PROJECT
Docket Nos. CP06-365-000, CP06-366-000, CP06-376-000, and CP06-377-000

Figure 2.1.5-1 Mitigation Site Locations

Page 2-29

Public access for this Non-Internet information is available only through the Public Reference Room, or by e-mail at public.referenceroom@ferc.gov.

Non-Internet Public

DRAFT ENVIRONMENTAL IMPACT STATEMENT FOR THE PROPOSED BRADWOOD LANDING PROJECT
Docket Nos. CP06-365-000, CP06-366-000, CP06-376-000, and CP06-377-000

Figure 2.2.1-1 Proposed Power Line to LNG Terminal

Page 2-30

Public access for this Non-Internet information is available only through the Public Reference Room, or by e-mail at public.referenceroom@ferc.gov.

constructed, owned, operated, and maintained by PacifiCorp. Five new standard H-frame pole towers would be constructed and one existing BPA tower would be rebuilt to support the 1.5-mile-long power line. The 80-foot-tall towers would be secured 11 feet into the ground, resulting in a total aboveground height of 69 feet. The power line would terminate at a substation located within the LNG terminal site. A 115 kV metering station would also be constructed near the LNG terminal substation on the project site. Necessary communication and redundant backup equipment would be placed in a National Electrical Manufacturers Association-rated outdoor cabinet attached to the structure. Existing roads could be used to access the 105-foot-wide construction right-of-way for the power line, but approximately 465 feet of additional access would be required for construction and maintenance of the H-frame pole towers. Some limited improvements to the existing access roads, such as widening and surfacing with aggregate, may be necessary to allow passage of construction and maintenance vehicles. NorthernStar proposes to use crushed rock aggregate supplied only by approved permitted upland sources. An analysis of the environmental impacts associated with construction and operation of the power line is provided in section 4 of this EIS.

2.2.2 Pipeline Laterals

NorthernStar has identified three potential lateral pipelines that would be constructed in association with the proposed project. These facilities would be constructed by entities other than NorthernStar and are tentative at this time. Preliminary, conceptual information on these three laterals is provided below.

As previously discussed, NorthernStar proposes to construct metering facilities associated with the interconnect/delivery point at MP 3.7 for the Wauna Mill. Georgia-Pacific would obtain the necessary permits and construct the lateral pipeline necessary to connect the metering facilities at the delivery point to the tie-in with its existing natural gas supply system. It is anticipated that the lateral would be 4 inches in diameter and about 0.2 mile long.

Northwest Natural would construct a lateral pipeline from the proposed interconnect with NorthernStar's pipeline at MP 11.4 to its existing pipeline. The lateral would be about 1.4 miles long and 24 inches in diameter. Northwest Natural would obtain the necessary permits to construct and operate its lateral pipeline.

At MP 18.9, NorthernStar would construct metering facilities associated with the interconnect/delivery point for the PGE Beaver Power Plant. An approximately 0.6-mile-long, 12-inch-diameter lateral pipeline would be constructed by PGE from the interconnect/delivery point to its existing natural gas supply system. The lateral pipeline would be constructed entirely within PGE property. PGE would obtain the necessary permits to construct and operate its lateral pipeline.

Based on our review of the information provided by NorthernStar on these potential lateral pipelines, we believe environmental impacts associated with these nonjurisdictional facilities would be minimal. However, to ensure that potential issues are adequately addressed, **we recommend that:**

- **<u>Prior to pipeline construction</u>, NorthernStar should file with the Commission the following information on the nonjurisdictional lateral pipeline facilities:**

  a. final routing and design information, including maps depicting the location of the facilities;

b. documentation of consultations with the appropriate agencies and the status of federal, state, or local permits or approvals required for their construction; and

c. status and copies of agency clearances (or copies of any surveys and reports prepared) for wetlands, threatened and endangered species, and cultural resources.

2.2.3 Salmon Enhancement Initiative

NorthernStar proposes to implement an SEI to contribute to the recovery of salmon and the lower Columbia River ecosystem. The SEI would be entirely voluntary and would be above and beyond the mitigation measures used to avoid, minimize, rectify, reduce, and/or compensate for environmental impacts that are required by the regulations. NorthernStar's SEI would entail providing funding for salmon preservation, enhancement, and restoration projects on the lower Columbia River that would likely total more than $50 million over the life of the Bradwood Landing Project. The National Fish and Wildlife Foundation's Western Partnership Office in Portland, Oregon would serve as the fiscal agent for SEI funds. The long-term implementation of this voluntary SEI is outside of FERC's regulatory authority. The SEI is described in more detail in section 4.6.2.2.

2.3 LAND REQUIREMENTS

Table 2.3-1 summarizes the land requirements for the facilities associated with the Bradwood Landing Project.

2.3.1 Waterway for LNG Ship Transit and Turning Basin

As previously mentioned above, LNG ships heading to the Bradwood Landing LNG terminal would transit some 38 miles up the Columbia River from its mouth within an existing navigation channel. The states of Washington and Oregon share jurisdiction and ownership of the river and its bottom. The navigation channel is maintained by the COE. The navigation channel was dredged to a depth of 40 feet by the COE in 1976, and in 2006 the COE began to deepen the channel to 43 feet under a project it authorized in 2004. For most of its length from the mouth of the Columbia River to Bradwood at CRM 38 the federal navigation channel is 600 feet wide. NorthernStar is not proposing to make any modifications to the navigation channel in the Columbia River. However, NorthernStar is proposing to construct a turning basin/maneuvering area adjacent to the existing navigation channel. This maneuvering area would be about 2,000 feet by 2,000 feet in size and cover about 58 surface acres in the Columbia River. To create the maneuvering area, NorthernStar would have to dredge about 700,000 cubic yards of sediment from the river bottom.

2.3.2 LNG Terminal Facilities

The terrestrial portion of the LNG terminal would be located within a 411-acre parcel that NorthernStar currently controls on the southern shore of the Columbia River and southeastern end of the Clifton Channel in Clatsop County, Oregon. This place, called Bradwood Landing, was formerly the site of a series of historic timber mills that operated between about 1843-1852, 1910-1920, and 1930-1962. The mill and town at Bradwood was abandoned, and structures were destroyed or removed by the early 1980s. Wooden pilings along the river's edge associated with the former Bradwood saw mill, as well as a former mill pond, are still present. Between 1966 and 2002, the COE used the site for placement of about 873,000 cubic yards of dredged material from maintenance of the Columbia River navigation channel.

TABLE 2.3-1

Summary of Land Requirements Associated with Construction and Operation of the Bradwood Landing Project

Facility	Land Affected During Construction (acres)	Land Affected During Operation (acres)
LNG Terminal		
Offshore Maneuvering Area	58.0	58.0
Marine Berth	5.5	1.0
Onshore LNG Terminal Facilities		
Onshore Portion of Jettyhead	1.0	0.8
Transfer Pipelines	3.5	3.5
LNG Storage Tank Area	15.5	14.5
Vaporizers and Process Area	6.2	6.2
Meter Station	0.2	0.2
Buildings	1.0	0.5
Water Storage and Treatment Areas	5.5	4.5
Access Road	0.6	0.6
Railroad Relocation	9.4	0.0
Buffer	6.0	1.0
Other	13.0	7.3
Construction Worker Parking Lot	5.0	0.0
Power Line [a]	17.8	17.8
LNG Terminal Subtotal	148.2	115.9
Pipeline		
Pipeline Right-of-Way [b]	475.8	232.8
Temporary Extra Workspace	54.0	0.0
Pipe Storage and Contractor Yards	18.4	0.0
Aboveground Facilities	4.8	1.2
Access Roads	0.0	0.0
Pipeline Subtotal	553.0	234.0
Project Total	701.2	349.9

[a] Based on a 105-foot-wide right-of-way for both construction and operation of the power line and a 100-foot-wide construction area for access roads.

[b] Based on an 85- to 120-foot-wide construction right-of-way for the main pipeline, and a 100-foot-wide construction right-of-way for the interconnects. Permanent rights-of-way would be 50 feet wide.

The marine berth at the LNG terminal would occupy about 1 acre within the Columbia River, including the unloading platform and mooring dolphins. The operational size of the terrestrial portion of the LNG terminal would be about 40 acres. Another 17.8 acres would be used for the power line right-of-way (see section 2.2.1). A layout of the proposed facilities is provided on figure 2.1.3-1. Figure 2.3.2-1 depicts the LNG terminal construction area. Additional information on the land use and requirements for the LNG terminal site is provided in section 4.7.2.1.

2.3.3 Pipeline and Associated Aboveground Facilities

NorthernStar's proposed sendout pipeline would be installed within a region dominated by forest, with secondary uses that include cropland, pasture, and rangeland (section 4.7 provides more details about land use). About 19.4 miles of the pipeline would be within the State of Oregon (Clatsop and Columbia Counties) and about 16.9 miles of the pipeline would be within the State of Washington (Cowlitz County).

Non-Internet Public

DRAFT ENVIRONMENTAL IMPACT STATEMENT FOR THE PROPOSED BRADWOOD LANDING PROJECT
Docket Nos. CP06-365-000, CP06-366-000, CP06-376-000, and CP06-377-000

Figure 2.3.2-1 Proposed LNG Terminal Construction Area

Page 2-34

Public access for this Non-Internet information is available only through the Public Reference Room, or by e-mail at public.referenceroom@ferc.gov.

Construction of the pipeline facilities would disturb a total of about 553.0 acres of land, including the pipeline construction right-of-way, temporary extra workspace, two pipe storage and contractor yards, aboveground facilities, and access roads. Of this total, 475.8 acres would be disturbed by the pipeline construction right-of-way, 54.0 acres would be disturbed by temporary extra workspace, 18.4 acres would be disturbed by two pipe storage and contractor yards, and 4.8 acres would be disturbed by aboveground facilities. Modifications or improvements to existing roads used to access the project would not be required.

Approximately 234.0 acres of the 553.0 acres used for construction would be required for operation of the project. Of this total, 232.8 acres would be for the pipeline permanent right-of-way and 1.2 acres would be for the aboveground facilities. The remaining 319.0 acres would be allowed to revert to its former use. Additional information on the land use and requirements for the pipeline facilities is provided in section 4.7.3.1.

About 8.0 miles (22 percent) of the 36.3-mile-long pipeline route would be constructed adjacent to the existing KB pipeline. The remaining 28.3 miles (78 percent) would be constructed on newly created right-of-way.

NorthernStar proposes to use a 100-foot-wide construction right-of-way for the majority of the pipeline route. NorthernStar has also indicated that an additional 20 feet of construction right-of-way width may be needed for stockpiling topsoil wherever topsoil must be segregated from subsoil (e.g., in agricultural and residential lands). The 20 feet of additional width is based on the segregation of up to a 12-inch-thick layer of topsoil from directly over the pipe trench and under the spoil pile (trench plus spoil side).

Where the Bradwood Landing pipeline would be adjacent to the existing KB pipeline, the proposed temporary construction right-of-way would overlap onto the existing pipeline's permanent right-of-way. The overlap would be up to 10 feet on the spoil side of the pipe trench, but no closer than 15 feet from the existing pipeline. This would allow room to keep construction equipment off the operating pipeline, thus avoiding potentially damaging the existing pipeline.

In wetlands where the pipeline crossing would exceed 100 feet in length, NorthernStar proposes to use a 100-foot-wide construction right-of-way to account for the slumping of saturated segregated spoil piles. NorthernStar would reduce the construction right-of-way to a width of 85 feet in wetlands where the crossing length is 100 feet or less. The 85-foot limitation on the construction right-of-way width would not apply to wetlands in actively cultivated or rotated cropland. Pipeline impacts on wetlands are further discussed in section 4.4.1.3.

Following construction, a 50-foot-wide permanent right-of-way would be retained for operation and maintenance of the pipeline. The typical right-of-way cross sections that NorthernStar would use for the pipeline route are provided in Appendix D.

In addition to the construction right-of-way, NorthernStar would require temporary extra workspace outside the standard construction right-of-way at locations where additional excavation, soil placement requirements, or equipment management and staging would make it impracticable to carry out all construction operations within a 100-foot-wide corridor. These would include feature (e.g., road, railroad, waterbody) crossings; areas with steep side slopes or severe terrain; areas requiring topsoil segregation; tie-ins to existing pipelines and laterals; HDD entry and exit points; and staging and fabrication areas for HDD pull sections. NorthernStar has identified 43 temporary extra workspaces areas that are required for the project, affecting approximately 54.0 acres.

To support construction of the pipeline, NorthernStar proposes to use two pipe storage and contractor yards, one in Oregon (Yard A) and one in Washington (Yard B). Yard A would be located adjacent to the proposed pipeline at approximate MP 4.4, on land owned by Georgia Pacific and used previously for dredged material disposal (DMD) (see figure 2.3.3-1). Yard B would be located in Longview on current commercial property (see figure 2.3.3-2). Combined, the yards would affect 18.4 acres of previously disturbed land.

NorthernStar proposes to construct: 1) one pig launcher within the LNG terminal at MP 0.0, one pig launcher/receiver at MP 18.8, and one pig receiver at the pipeline terminus at MP 36.3; 2) meter stations at each of the following locations: the LNG terminal (MP 0.0), the delivery point to the Wauna Mill (MP 3.7), the interconnection with the Northwest Natural intrastate pipeline to the Mist storage facility (MP 11.4), the delivery point to the PGE Beaver power plant at Port Westward (MP 18.9), and the terminus of the pipeline at the interconnection with the Williams Northwest pipeline (MP 36.3); and 3) four MLVs at MPs 3.7, 18.8, 26.3, and 31.7. For each of these facilities, about 4.8 and 1.2 acres would be required for construction and operation, respectively.

NorthernStar would access the construction right-of-way via 32 existing public and private roads that intersect the right-of-way. The majority of roads are classified as dirt roads.

2.4 CONSTRUCTION PROCEDURES

This section describes the general procedures proposed by NorthernStar for construction of the LNG terminal and pipeline facilities. Refer to section 4 for more detailed discussions of proposed construction and restoration procedures as well as additional measures that we are recommending to mitigate environmental impacts.

The proposed LNG terminal and natural gas pipeline would be designed, constructed, operated, and maintained in accordance with federal safety standards that are intended to ensure adequate protection for the public and to prevent LNG and natural gas pipeline accidents or failures.

Under the provisions of the Natural Gas Pipeline Safety Act of 1968, as amended, NorthernStar would design, construct, operate, and maintain the LNG terminal facilities in accordance with the DOT's *Liquefied Natural Gas Facilities: Federal Safety Standards* (49 CFR 193). The facilities would also be required to meet NFPA 59A. These standards specify siting, design, construction, equipment, and fire protection requirements for new LNG facilities. The ship unloading facilities and any appurtenances located between the LNG ships and the last valve immediately before the LNG storage tank would be required to comply with applicable sections of the Coast Guard regulations in *Waterfront Facilities Handling Liquefied Natural Gas* (33 CFR 127) and Executive Order 10173.

The proposed pipeline facilities would be designed, constructed, operated, and maintained in accordance with DOT regulations in *Transportation of Natural and Other Gas by Pipeline: Minimum Federal Safety Standards* (49 CFR 192). Among other design standards, these regulations specify pipeline material selection; minimum design requirements; protection from internal, external, and atmospheric corrosion; and qualification procedures for welders and operations personnel. In addition, NorthernStar would comply with the siting and maintenance requirements in 18 CFR 380.15 and other applicable federal and state regulations.

Non-Internet Public

DRAFT ENVIRONMENTAL IMPACT STATEMENT FOR THE PROPOSED BRADWOOD LANDING PROJECT
Docket Nos. CP06-365-000, CP06-366-000, CP06-376-000, and CP06-377-000

Figure 2.3.3-1 Pipe Storage and Contractor Yard A

Page 2-37

Public access for this Non-Internet information is available only through the Public Reference Room, or by e-mail at public.referenceroom@ferc.gov.

Non-Internet Public

DRAFT ENVIRONMENTAL IMPACT STATEMENT FOR THE PROPOSED BRADWOOD LANDING PROJECT
Docket Nos. CP06-365-000, CP06-366-000, CP06-376-000, and CP06-377-000

Figure 2.3.3-2 Pipe Storage and Contractor Yard B

Page 2-38

Public access for this Non-Internet information is available only through the Public Reference Room, or by e-mail at public.referenceroom@ferc.gov.

NorthernStar would construct the terminal facilities in accordance with its *Erosion and Sediment Control Plan – Bradwood Landing Terminal* (terminal ESC Plan). The terminal ESC Plan was developed in accordance with the requirements necessary for submittal of the General 1200-C NPDES permit application issued by the ODEQ. The terminal ESC Plan includes Best Management Practices (BMP) as recommended by the ODEQ's 2005 *Erosion and Sediment Control Manual*. In addition to erosion and sediment control measures, this plan describes specifications for hazardous material transportation, handling, storage, spill prevention, and spill response. A final terminal ESC Plan would be completed following preparation of the specific phased construction plans.

NorthernStar would construct the pipeline facilities in accordance with the FERC staff's *Upland Erosion Control, Revegetation, and Maintenance Plan* (Plan) and *Wetland and Waterbody Construction and Mitigation Procedures* (Procedures), with any FERC-approved alternative measures (see section 4.4.1.3). The intent of the FERC staff's Plan and Procedures is to assist applicants by identifying baseline mitigation measures for minimizing the extent and duration of disturbances on soils, wetlands, and waterbodies associated with projects under the FERC's jurisdiction throughout the country. As general guidelines, the Plan and Procedures may be less stringent than state and local guidelines that are based on state or local concerns, issues, and/or regulations. NorthernStar has also drafted an *Erosion and Sediment Control Plan for Oregon – Bradwood Landing Pipeline* (pipeline ESC Plan) and a *Construction Stormwater Pollution Prevention Plan for Washington – Bradwood Landing Pipeline* (SWPPP).[2] These plans incorporate elements of the FERC's Plan and Procedures, state and county requirements and provisions, stormwater pollution prevention plans, and spill prevention and response procedures. Drafts of these plans were included in NorthernStar's JPA and JARPA. The pipeline ESC Plan and SWPPP are discussed further in section 4.2.3.2.

Construction of the LNG terminal facilities would include site preparation; construction of the ship berth and unloading facilities along the shoreline of the Columbia River; and construction of the LNG storage, process, and support facilities. Associated construction activities would include dredging of the ship berth and maneuvering area in the Columbia River.

Typical construction activities would occur between 7 AM and 7 PM, 5 days per week. During concentrated periods, construction may include longer hours and additional days of the week to complete a particular construction phase more efficiently. Pile driving may occur between the hours of 7 AM and 10 PM (for about 60 days spread over a period of up to 120 days) and dredging may occur 24 hours per day (for a period of approximately 48 to 72 days). These extended hours allow for the construction activities to be completed under a compressed schedule, reducing the number of total construction days for pile driving and dredging. This is a typical approach to construction because it limits the length of time people who live in the vicinity may be affected.

The LNG terminal components and equipment would be brought to the site by truck or rail. Depending on their sizes, various facility components would arrive in different states of assembly. Some equipment would be self-contained and require no assembly. On-site workshops, staging, and laydown areas would be equipped and sized appropriately to complete the final assembly. No major fabrication of facility components is anticipated on site.

A brief explanation of some of the primary construction tasks is provided below.

---

[2] NorthernStar included its terminal ESC Plan and pipeline ESC Plan as part of its JPA, and included its SWPPP as part of its JARPA. NorthernStar's JARPA was filed with the FERC on November 6, 2006, and supplemented with a filing on November 22, 2006. NorthernStar also filed its JPA on November 22, 2006, and filed revisions to the JPA with the FERC on April 5, 2007. These documents are available for viewing by the public on the FERC's Internet web page at www.ferc.gov, through the eLibrary link, selecting "General Search," entering the docket number minus the last three digits (i.e., CP06-365), and putting in the proper date range. The FERC's Plan and Procedures are also available to the public on the FERC's Internet web page by clicking on Industries, Gas, Environment, Guidelines.

2.4.1.1 Site Preparation

Site work at the LNG terminal would begin with clearing and grubbing, followed by rough grading of the entire site to allow for safe passage of construction equipment and materials. Approximately 50,000 cubic yards of soil and vegetation would be relocated to an area that is 4.01 acres in size, approximately 2,000 feet northwest of the intersection of Clifton Road and Bradwood Road. During grading, appropriate erosion control measures would be installed, including temporary drainage ditches, catchment ponds, and silt fences. Aggregate (crushed rock) needed for project construction, including road improvements, would be sourced from an existing permitted quarry, and may include material from an existing permitted basalt quarry located within the proposed LNG terminal site. Concrete would be supplied by an on-site batch plant.

Existing dredge piles on the property would be distributed across the site to serve as the base for the LNG terminal. NorthernStar proposes to use up to 400,000 cubic yards of the material dredged from the ship maneuvering area in the Columbia River to raise the base for the terminal to the desired elevation of 20 feet North American Vertical Datum (NAVD) 88, with a perimeter berm at an elevation of 25 feet. The proposed elevation for the LNG terminal was designed to be well above the 100-year floodplain, which is at 13.23 feet NAVD.

NorthernStar would pipe the dredged materials to the LNG terminal site using hydraulic cutterhead dredging equipment. Dredged material would be piped to the more distant areas of the site first. The water that conveys the dredged material would separate from the material as it is deposited on the site. NorthernStar expects that all or most of the dredge water would percolate into the sandy soil at the site. NorthernStar would construct a berm to prevent any dredge water from washing into adjacent wetlands, Hunt Creek, or the Columbia River. Any dredge water that does not percolate into the soil would drain to the low point within the berm, which would be the former lumber mill log pond, where it would accumulate. Any silt in the water would settle out in the pond. Additional details regarding the dredge water are provided in section 4.3.2.3.

The berm used to contain the dredged material would become the permanent 5-foot containment berm that surrounds the entire site. In most places, concrete would be mixed with the sand to strengthen the berm and minimize its footprint. A paved perimeter road would be constructed on top of the berm. Once the dredged material has been compacted and stabilized, the facilities would be constructed on top. Because many of the construction activities would overlap with each other, the site would be subdivided into work areas assigned to the contractor and major subcontractors.

The material that is dredged from the ship berth and maneuvering area that is not placed at the LNG terminal site would be placed at the Wahkiakum County Sand Pit site, located at the northern end of Puget Island. This placement area, and other alternative dredged material placement sites considered by NorthernStar, are described in section 3.1.9.2.

Access Road and Hunt Creek Bridge

As discussed in section 2.1.3.6, Bradwood Road enters the LNG terminal site from Clifton Road over a bridge that crosses Hunt Creek. NorthernStar would need to improve and widen this 1,150-foot-long gravel access road for use during construction and operation of the proposed project. Bradwood Road would be paved and widened to 24 feet by clearing and grading the area directly adjacent to the existing roadway.

Because of the steep slopes along Clifton Road, no significant widening of the road would be feasible; however, NorthernStar may make minor improvements to reduce impacts to existing traffic.

These improvements would consist of widening the roadway by 2 to 3 feet at selected locations based on available area. No cuts would be made into the steep slope to the west of the road, and no slope stability concerns would be associated with the road improvements. Furthermore, no slope stability concerns are associated with the existing Clifton Road alignment, as the road has been in use by local, as well as log-truck and related traffic, for many years with no major repairs visible.

The existing bridge over Hunt Creek is not adequate to withstand the anticipated loadings associated with construction-related traffic. NorthernStar would replace the bridge with a new one built of four 75-feet-long, 3-feet-high, pre-cast concrete deck bulb T-girders. These would be supported on 12-inch-diameter concrete-filled steel piles, placed above the mean higher high water (MHHW) elevation that would be vibrated into place. The new bridge deck elevation would be 2.4 feet above the 100-year flood elevation. The bridge decking would be asphalt. Cast-in-place concrete aprons would be added at the ends of the bridge to match the existing grade. Each side of the bridge would be curbed and have curb-mount rails. The bridge would be sloped to one side, and an additional 25 feet of extruded concrete curb would be constructed on each side beyond the concrete apron. This curb is designed to guide stormwater well beyond the ends of the bridge where it can be discharged into existing vegetation. Because the abutments would be placed well beyond the lateral extent of MHHW and the 2-year flood elevation, and because the lower reaches of Hunt Creek are largely tidally influenced by backwater from the Columbia River, within-channel flow velocities are expected to be sufficiently low, and bank and scour protection would not be necessary.

The over-water portions of the bridge would be constructed during the in-water work period for Columbia River tributaries between Big Creek and St. Helens of July 1 – September 15. The abutments would be constructed outside of the lateral extent of both MHHW (at 9.45 feet NAVD 88) and the 2-year flood elevation on Hunt Creek (at 11.43 feet NAVD 88) to avoid in-water work.

Railroad Line Realignment

An existing PWRR line runs through the proposed LNG terminal site. NorthernStar would need to remove a 4,200-foot-long portion of the existing tracks and relocate the railroad up to 250 feet south of its current alignment, still within the parcel controlled by NorthernStar. The right-of-way for the new railroad alignment would be 100 feet wide (i.e., 50 feet on each side of the centerline), consistent with the current right-of-way. Existing or new ballast would be moved or placed in the new right-of-way location and old tracks would be moved or replaced by new tracks. An undisturbed vegetation buffer zone would be maintained between the railroad realignment construction activities and the edge of Hunt Creek that would be at least 30 feet wide. The railroad line is in service, but not currently in use, which would allow for the possibility of delivering construction materials for the project by train.

Blasting

Blasting may be required for some areas along the far southern boundary of the site during realignment of the railroad line. Blasting at the existing on-site rock quarry may also be used to generate rock to be crushed for aggregate and sand to produce concrete and foundation bedding. Blasting would be conducted in accordance with all applicable federal, state, and local regulations. These regulations include *State of Oregon 2004 Fire Code Amendments*; *Explosives, Oregon's Revised Statutes, November 10, 2004*; and the Safe Explosives Act (27 CFR 555) or other more current regulations. NorthernStar would employ mitigation measures, as necessary, to minimize potential fly rock (i.e., using blasting nets/curtains) and to minimize vibration, noise, and safety impacts (i.e., coordinating with landowners in the project area).

2.4.1.2 Maneuvering Area and Ship Berth

NorthernStar proposes to dredge about 700,000 cubic yards of material from an approximate 58-acre area within the Columbia River to create the maneuvering area for the LNG terminal. The area would be dredged to a total depth of -43 feet CRD, which includes a 1-foot overdredge allowance. The sides of the dredged area would be cut to a 3 (horizontal) to 1 (vertical) slope, and the area at the toe of the slope would be about 52 acres. The dredging of the berth and maneuvering area would be performed using a hydraulic cutterhead (suction) dredge. Periodic dredging would be performed to maintain the berth and maneuvering area at the design water draft (see section 2.7.2).

The ship berth is expected to be constructed from the water using an offshore construction spread. The piling for the wharf would be constructed using one pile driver during the in-water work window. A 50-ton derrick barge and a 25-ton truck crane would be the primary construction equipment required, along with several barges used to stage rebar, forms, and other materials. The concrete would be transferred from the shore by the 50-ton derrick barge. Friction collars would be installed on the piles and the concrete forms, and rebar would be positioned to receive the concrete. Concrete would be delivered from shore into the completed forms to extend the wharf out into the water until the ship berth is constructed. Expandable foam would be used to seal the forms and ensure that uncured concrete is fully contained. Temporary scaffolding would be put in place with a wooden deck sub-structure and netting would be positioned below the construction area to catch any material or debris. The forms for the remote breasting and mooring dolphins would be constructed in a similar manner.

All in-water work associated with construction of the ship berth and unloading facilities is expected to take place between November 1 and February 28 (see section 4.5.2.1.).

2.4.1.3 LNG Storage and Support Facilities

One of the most technical aspects of the project would be installation of the LNG storage tanks and associated process and support facilities because specialized materials and construction techniques are necessary. Temporary construction pads would be completed before mobilization of the LNG storage tank components to serve as a laydown and staging area. Most of the equipment and components would be prefabricated and would require additional assembly, placement, and positioning once on site. Major pieces of construction equipment, including high lift and tower cranes, would be required for the erection of LNG storage tanks and other large components.

LNG Storage Tank Installation

The civil work for the foundation and pilings for the LNG storage tanks would follow immediately after the base soils have been stabilized. This process would involve vibroflotation to improve the liquefaction resistance of the soils. Vibroflotation, also known as vibrocompaction, is the compaction of loose granular soils by penetration of a vibratory probe. Water is typically jetted to aid the compaction process. The resulting void that develops is filled with clean sand or gravel that is compacted by the probe. The LNG storage tank foundations would consist of a 32-inch-thick reinforced concrete pile cap located on ground on a piled foundation. The piles, consisting of 402, 30-inch-diameter auger-cast concrete piles or driven steel piles approximately 165 feet long, would be located under each LNG storage tank.

The outer walls of the LNG storage tanks would consist of pre-stressed reinforced concrete with a wall thickness of at least 2 feet. A carbon steel prefabricated dome roof structure would be erected on top of the concrete tank outer wall to form a weather-protected space inside of the concrete outer tank. The

base insulation and inner 9 percent nickel steel tank would then be constructed within this protected environment. Concrete would be poured over the steel dome to form the final roof structure.

Once the steel roof structure has been erected and welded in place, installation of the base insulation, secondary bottom, and inner 9 percent nickel steel tank would commence. Internal components consisting of vapor barrier, in-tank pump columns, instrument wells, bottom and top fill pipes, piping for purging and cool down, access ladders, and tank instrumentation would also be installed. Exterior equipment would include roof platforms, walkways, access stairway, and emergency escape ladder and piping.

Insulation of the LNG storage tanks would consist of base insulation, shell insulation, and suspended roof insulation. The base insulation material would consist of load-bearing cellular glass blocks and a concrete ring beam beneath the inner tank shell. After the inner tank is hydrostatically tested, the tank would be washed and cleaned. A resilient blanket would be installed on the outside of the inner wall of the tanks. Once the tank is completely sealed and the exterior is completely dry, expanded perlite would be used to fill in the annular space between the inner and outer tanks. A fiberglass blanket would be installed on the suspended deck above the inner tank to complete the insulation system.

Other Facility Construction

The other facilities such as processing areas, pipe racks, control rooms, utility areas, warehouse, instrument buildings, administrative offices and the gate house would be constructed concurrently with the LNG storage tanks. Foundations and pad areas would be established for each facility, and they would be constructed according to local building code requirements. These facilities would be ready for operation by the pre-commissioning stage.

Final Grading and Site Restoration

Areas disturbed during construction of the LNG terminal would be finish graded at an elevation of approximately 20 feet NAVD 88 using a layer of compacted crushed stone fill or other appropriate material. Unless covered by equipment, gravel, or other covering, areas disturbed during construction of the LNG terminal site would be restored in accordance with NorthernStar's terminal ESC Plan. Restoration of the shoreline would follow a conceptual plan that identifies specific revegetation practices depending on the vegetation zone (i.e., emergent zone, riparian low scrub zone, riparian shrub zone, and upland herbaceous zone). Revegetation of the shoreline would include using potted plants, emergent plugs, and broadcast seed mixes to establish native herbaceous and woody species within these zones.

2.4.1.4 Testing

NorthernStar would conduct testing of the LNG storage tanks and other facilities in accordance with applicable federal and state codes and standards. Some of the tests to be carried out are described below.

Hydraulic Testing of the LNG Storage Tanks

The inner container of the LNG storage tanks would be hydrostatically testing in accordance with the requirements of API 620. NorthernStar proposes to obtain the hydrostatic test water from the Columbia River using the terminal's permanent surface water intake and pumping station. The pumping station would be equipped with two 400 horsepower pumps, an electric primary pump and a diesel backup. The pumps would not operate simultaneously. The maximum water intake rate of each pump would be 4,400 gpm. Construction activities would be scheduled to enable water used to test the first

tank to be reused to test the second tank, thus limiting the amount of water needed for hydrostatic testing of the tanks to approximately 30 million gallons. However, if construction does not proceed as planned, the two tanks may need to be tested at different times, in which case the amount of water needed for hydrostatic testing of the tanks would be approximately 60 million gallons. The river water used for hydrostatic testing of the tanks would be filtered before use to remove suspended solids and tested for bacteria. If bacteria concentrations are high enough to cause corrosion of the steel tanks, the water would be chlorinated before use.

After hydrostatic testing of the LNG storage tanks is completed, the water would be discharged to the Columbia River through a temporary outfall extending approximately 300 feet offshore. If the water has been chlorinated, it would be dechlorinated before being discharged. NorthernStar does not expect that the hydrostatic test water from the tanks would need to be further treated before discharge to the river. However, all batches of tank hydrostatic test water would be sampled and analyzed before discharge and treated as necessary to enable safe discharge to the river.

Pneumatic Testing of the LNG Storage Tanks

Each tank would also be pneumatically tested at a pressure of 1.25 times the design pressure for 1 hour in accordance with API 620.

Hydraulic/Pneumatic Testing of Piping Systems

Piping systems would be tested in accordance with established codes either hydraulically or pneumatically, as applicable. In general, cryogenic piping would be tested with dry air or nitrogen at 1.1 times the design pressure. Non-cryogenic piping would be tested with water at 1.5 times the design pressure. Water required for the hydrostatic testing of piping (approximately 1.5 million gallons) would be obtained from the on-site groundwater well. The well water would not be treated before it is used for hydrostatic testing of piping.

After use, the hydrostatic test water from the piping would be discharged to the ground or occasionally to the Columbia River through a temporary outfall. NorthernStar does not expect that the hydrostatic test water from the piping would need to be treated before discharge to the river. However, all batches of water used for hydrostatic testing of piping would be sampled and analyzed before discharge and treated as necessary to enable safe discharge to the river.

2.4.2 Pipeline and Associated Aboveground Facilities

Construction of the proposed pipeline would primarily involve standard cross-country pipeline construction techniques as described in section 2.4.2.1. Special construction techniques would also be used when constructing the pipelines across wetlands; waterbodies; roads and railroads; foreign pipelines; and agricultural, residential, commercial, and industrial areas. Rugged terrain also may require special construction techniques. These special construction techniques are described in section 2.4.2.2. Construction of the aboveground facilities associated with the pipeline is discussed in section 2.4.2.3.

2.4.2.1 General Pipeline Construction Techniques

Figure 2.4.2-1 shows the typical steps of cross-country pipeline construction. Standard pipeline construction proceeds in the manner of an outdoor assembly line composed of specific activities that make up the linear construction sequence. These operations collectively include survey and staking of the right-of-way, clearing and grading, trenching, pipe stringing and bending, welding and coating, lowering-in and backfilling, hydrostatic testing, and cleanup.

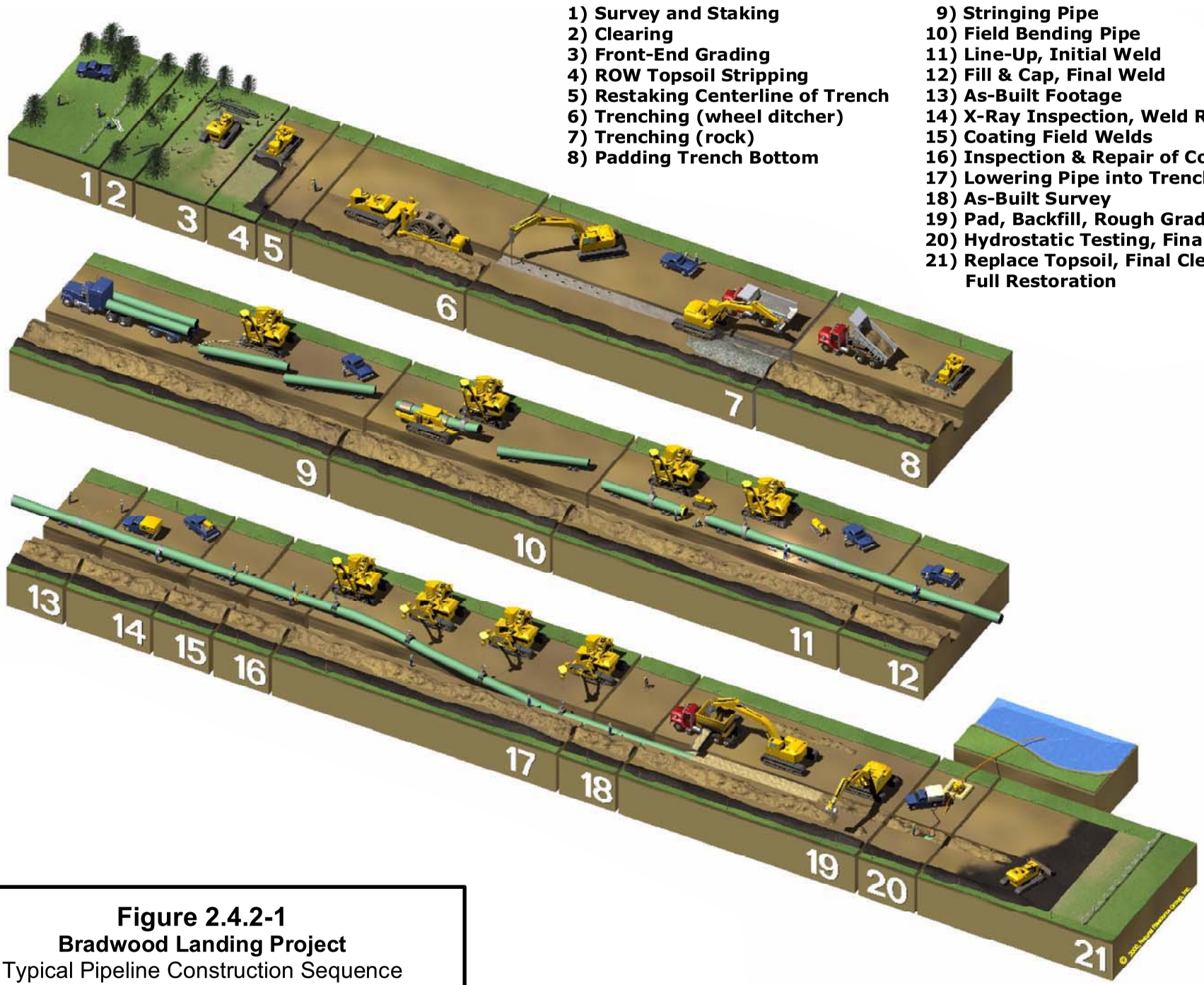

Figure 2.4.2-1
Bradwood Landing Project
Typical Pipeline Construction Sequence

Survey and Staking

Before construction, NorthernStar's crews would survey and stake the centerline and exterior boundaries of the construction right-of-way. The exterior boundary stakes would mark the limit of approved disturbance areas and would be maintained throughout the construction period. Utility lines would be located and marked to prevent accidental damage during pipeline construction. NorthernStar would notify affected landowners, regulatory agencies, and other appropriate stakeholders before surveying and staking the proposed route.

Clearing and Grading

NorthernStar would clear the right-of-way of large obstacles such as trees, brush, and logs. Timber would be removed when necessary for construction purposes. Timber and other vegetative debris may be chipped for use as erosion-control mulch, or otherwise disposed of in accordance with applicable state and local regulations and landowner crossing agreements. Fences would be cut and braced along the right-of-way and temporary gates would be installed to control livestock and limit public access. The right-of-way would then be graded where necessary to create a reasonably level working surface to allow safe passage of construction equipment and materials. Where applicable (e.g., residential and agricultural lands), conserved topsoil would be stockpiled along one side of the right-of-way, allowing the other side to be used for access, material transport, and pipe assembly. NorthernStar would install temporary erosion control measures at this time.

Trenching

A rotary trenching machine, rock trencher, track-mounted backhoe, or similar equipment would be used to excavate a trench to a sufficient depth to provide a minimum 3-foot depth of cover. Depending on soil conditions, the top of the trench could be up to 25 feet wide and the bottom of the trench would typically be at least 12 inches wider than the diameter of the pipe (i.e., 42 inches wide for the 30-inch-diameter pipe and 48 inches wide for the 36-inch-diameter pipe). The sides of the trench would be sloped for stability and safety.

Spoil material excavated during trenching operations would be temporarily piled to one side of the right-of-way adjacent to the trench. In areas where topsoil stripping is required, the topsoil and subsoil would be stored in separate windrows or piles on the construction right-of-way and would not be allowed to mix.

Where the pipeline route is adjacent to an existing pipeline, the subsoil spoil would be placed on the same side of the trench as, but not directly over, the existing pipeline to keep working equipment off of the operating pipeline. In these collocated sections, the topsoil would be stockpiled on the working side of the right-of-way, outside the construction equipment lane.

Stringing and Bending

Either before or after trenching, 80-foot-long sections of externally coated pipe (also referred to as joints) would be shipped to the pipe storage and contractor yards and then transported to the right-of-way by truck and placed or "strung" along the excavated trench in a single, continuous line, easily accessible to the construction personnel on the working side of the trench, opposite the spoil side. At crossings of streams, railroads, and highways the amount of pipe required to span the crossing would be stockpiled in temporary staging areas on one or both sides of the crossing.

The pipe would be delivered to the construction right-of-way in straight joints. Some bending of the pipe would be required to allow the pipeline to follow natural grade changes and direction changes of the right-of-way. Selected joints would be bent in the field by track-mounted hydraulic bending machines, as necessary, before welding.

Welding and Coating

After stringing and bending are complete, pipe sections would be placed on temporary supports adjacent to the trench. The ends would be aligned and welded together using multiple passes for a full penetration weld. Only qualified welders would be permitted to perform the welding. Welders and welding procedures would be qualified according to applicable American National Standards Institute (ANSI), American Society of Mechanical Engineers, and API Standards.

To ensure that the assembled pipe meets or exceeds the design strength requirements, NorthernStar would inspect all welds, both visually and radiographically (i.e., x-ray), and would make any necessary repairs. Following weld inspection, the previously uncoated ends of the pipe at the welds would be epoxy coated. The coating on the completed pipe section would be inspected and any damaged areas repaired.

Lowering-in and Backfilling

After welding and coating are completed, the pipe would be lowered into the trench by side-boom tractors. Before lowering the pipe, the trench would be inspected to ensure that it is free of rocks and other debris that could damage the pipe or the coating. In addition, the pipe and trench would be inspected to ensure that the configurations of the pipe and trench configurations are compatible.

Bladed equipment or a specially designed backfilling machine would be used to backfill the trench. No construction debris, including wooden supports, welding rods, containers, brush, trees, or refuse of any kind, would be permitted in the backfill. If rocks or other materials that could damage the pipe or coating are present in the backfill, a padding machine would be used to separate the rock from the backfill. In some instances, clean fill or additional protective coating such as rock shield would be placed around the pipe before backfilling.

Segregated topsoil, where applicable, would be replaced after backfilling the trench with subsoil. Following backfilling, a small crown of material would be left to account for any future soil settling that might occur.

Hydrostatic Testing

After backfilling, NorthernStar would hydrostatically test the pipeline in accordance with DOT regulations to ensure that the system is capable of operating at the design pressure. The testing process involves filling a segment of the pipeline with water and maintaining a prescribed pressure for a specified amount of time. If a leak or break in the line were to occur during testing, NorthernStar would repair and retest that section of pipe until DOT specifications are met.

A total of approximately 9.0 million gallons of water would be withdrawn from the Columbia River to hydrostatically test the pipeline. However, an additional 0.5 million gallons may be required to account for any water losses and make-up water. This water would be acquired from the Oregon side of the Columbia River at the location where the pipeline construction right-of-way meets the river. The water would be supplied via temporary piping connections from the source area or transported by tanker truck. No chemicals would be added to the test water. The water would be discharged through a straw

bale enclosure to the ground surface at an upland site near the river withdrawal location. If the construction sequence allows, the same water used for testing the Bradwood Landing pipeline may be used to test the Bradwood Landing LNG storage tanks to conserve water. Each segment of the pipeline to be installed by the HDD method would be initially hydrostatically pressure tested separately from the overall pipeline before and after installation in the borehole, then included in the overall pipeline pressure test once all the HDD segments are tied into the pipeline.

Meter assemblies would be built and tested separately from the pipeline. This usually occurs in contractor yards and involves relatively small volumes of water.

Cleanup

After a segment of pipe has been installed, backfilled, and successfully tested, the right-of-way, temporary extra workspaces, and other disturbed areas would be finish graded and the construction debris would be taken to an approved disposal area. NorthernStar would finish-grade the right-of-way to match the contour of adjacent undisturbed areas. In agricultural areas, compacted subsoil would be disked and the segregated topsoil would be replaced. Temporary and permanent erosion control measures, including diversion terraces and revegetation, would be installed at this time. Private and public property, such as fences, gates, driveways, and roads disturbed by the pipeline construction would be restored.

Revegetation

The restored construction right-of-way would be revegetated in accordance with NorthernStar's pipeline ESC Plan for Oregon and SWPPP for Washington, FERC staff's Plan, other permit requirements, and site-specific landowner requests. Turf, ornamental shrubs, and other landscaping material would be restored in accordance with individual landowner agreements.

2.4.2.2 Special Pipeline Construction Techniques

Construction across wetlands; waterbodies; roads and railroads; foreign pipelines and utilities; agricultural, residential, commercial, and industrial areas; and rugged terrain may require special construction techniques. Special techniques would also be used if blasting is required. These techniques are described below.

Wetland Crossings

NorthernStar would construct its pipeline across wetlands in accordance with the FERC staff's Procedures and applicable permits. During crossing of unsaturated wetlands (i.e., wetlands without standing water or saturated soils), construction would be similar to the upland construction described above. If the crossing is less than 100 feet long, NorthernStar has requested the use of an 85-foot-wide construction right-of-way. In these areas, excavated material could be effectively moved to the adjacent upland spoil storage areas within the right-of-way. Where wetland crossings are longer than 100 feet, NorthernStar has requested use of a 100-foot-wide construction right-of-way. Section 4.4.1.3 describes these proposed modifications to the FERC Staff's Procedures in greater detail.

Where necessary to prevent rutting or mixing of topsoil and subsoil, a temporary board road would be installed to allow passage of equipment with minimal disturbance of the surface and vegetation in wetlands. Trees would be cut to grade, but stumps would only be removed within 15 feet of the edge of the pipe trench, or where safety concerns dictate otherwise. Topsoil over the pipe trench would be segregated from subsoils. A riparian buffer would be left between the wetland and the upland construction areas except for the pipe trench itself and erosion control measures (e.g., silt fences,

interceptor levees, and hay bale structures) would be installed and maintained to minimize sedimentation into the wetland. Trench plugs would be installed where necessary to prevent the unintentional draining of water from the wetland. After construction, forested wetlands would be replanted in-kind with trees, with the exception of the portion of the right-of-way within 5 feet of the pipeline (10 feet total), thereby minimizing the extent of disturbance. NorthernStar's proposed tree planting exceeds the revegetation requirements of the FERC staff's Plan and Procedures. The corridor centered on the pipeline would be planted with a native grass seed mix and maintained in an herbaceous state to facilitate maintenance and inspection. Wetlands might also be crossed using the HDD construction method described below.

Waterbody Crossings

NorthernStar would cross small perennial and intermediate waterbodies in accordance with the FERC staff's Procedures and the proposed alternative measures described in section 4.4.1.3 as well as applicable permits. Intermittent streams that are dry at the time of crossing would be crossed using conventional upland construction techniques described above. The stream volume and velocity and available backfill materials would be considered in establishing the depth of cover over the pipeline in each stream in order to minimize the potential for scour and the ultimate exposure of the pipeline. Section 4.3.2.4 lists the proposed method for crossing all of the waterbodies along the pipeline route. Some waterbodies, including the Columbia River, would be crossed using the HDD method described below. Others would be crossed using open-cut or conventional bore methods. No bank hardening (e.g., riprap) is proposed to be used at any crossing.

NorthernStar would use two types of open-cut methods, the flume method and the dam and pump method. The flume method (see figure 2.4.2-2) is a standard dry waterbody crossing construction method that involves diverting the flow of water across the trenching area through one or more flume pipes placed in the waterbody. The first step in the flume crossing method would involve placing a sufficient number of adequately sized flume pipes in the waterbody to accommodate the highest anticipated flow during construction. Before the flume pipe is installed at the waterbody, it would be inspected to ensure it is free of dirt, grease, oil, or other pollutants. Excessive dirt would be removed. The pipe would be steam-cleaned, if necessary, to remove any oil or grease present before placement in the stream.

After placing the pipe in the waterbody, sand or pea gravel bags, water bladders, or metal wing deflectors would be placed in the waterbody upstream and downstream of the trench area. These devices would serve to dam the stream and divert the water flow through the flume pipes, thereby isolating the water flow from the construction area between the dams. Several measures would be taken to minimize short-term increases in turbidity during dam construction, including: 1) all in-stream work would be carried out on foot and no equipment would operate in the streambed; 2) sandbags would be filled with a non-leachable material such as clean, prewashed sand; 3) sandbags would be tied securely before they are installed; and 4) sheets of plastic would be interwoven between the layers of sandbags to ensure an effective seal. Leakage from the dams or subsurface flow from below the waterbody bed may cause water to accumulate in the isolated area. If necessary, the accumulated water would be periodically pumped out and discharged into energy dissipation/sediment filtration devices, such as a geotextile filter bag or straw bale structure, or into well-vegetated areas away from the water's edge.

Trackhoes located on both banks of the waterbody would excavate a trench under the flume pipe in the dewatered streambed. Spoil excavated from the waterbody trench would be placed or stored a minimum of 10 feet from the edge of the waterbody. Once the trench is excavated, the prefabricated segment of pipe would be installed beneath the flume pipes. The trench would then be backfilled with native spoil from the waterbody bed. Immediately following pipe installation and backfilling, and before removing the dams and flume pipes and returning flow to the waterbody channel, the streambanks would be reestablished to approximate preconstruction contours and stabilized. Erosion and sediment control

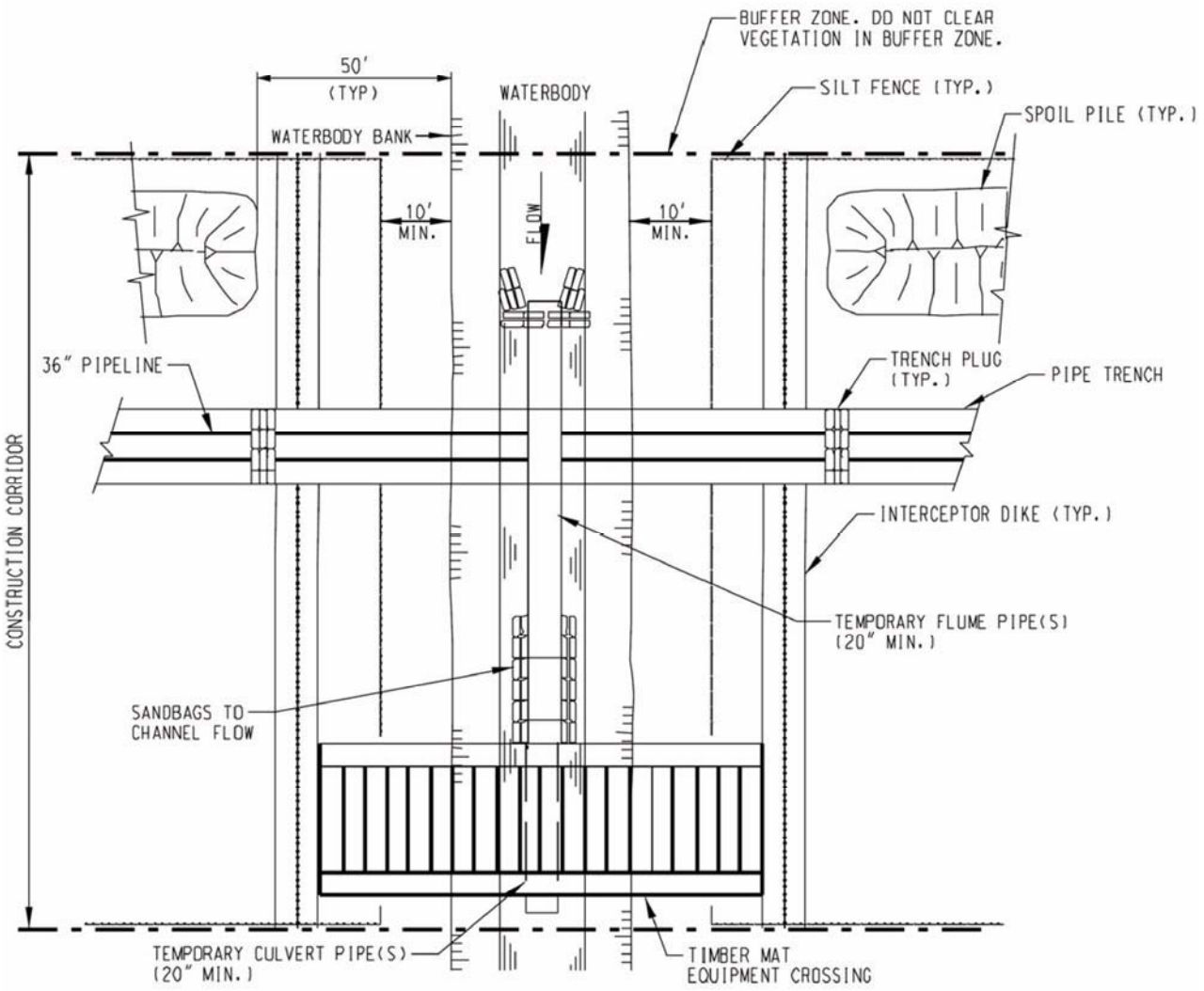

Figure 2.4.2-2
Bradwood Landing Project
Flume Waterbody Crossing Method

measures would be installed across the construction right-of-way to reduce streambank and upland erosion and sediment transport into the waterbody. Sediment barriers, such as silt fence and/or straw bales or drivable berms would be maintained across the right-of-way at all waterbody approaches until permanent vegetation is established. After backfilling and major grading work are complete, any drivable berms would be removed and the ground surface returned to original contours. If a sediment control device is still needed at a location where a drivable berm was removed, a temporary sediment control device such as silt fencing would be installed. Equipment bridges would be removed when construction and restoration are completed.

The dam and pump method (see figure 2.4.2-3) is a standard dry waterbody crossing construction method that may be used as an alternative to the flume method for waterbodies less than 10 feet wide. This method is similar to the flume crossing method except that pumps and hoses would be used instead of flumes to move water across the construction work area. The technique involves damming of the waterbody with sandbags and/or steel plates upstream and downstream of the trench area. Pumps would be set up at the upstream dam with the discharge line routed through the construction area to discharge water immediately downstream of the downstream dam. An energy-dissipation device would be used to prevent scouring of the streambed at the discharge location. Water flow would be maintained through all but a short reach of the waterbody at the actual crossing. The pipeline would be installed and backfilled. After backfilling, the dams would be removed and the banks restored and stabilized. For both open-cut crossing techniques, the top 12 inches of substrate would be segregated for each crossing and returned. If additional material is needed, matching material would be utilized.

NorthernStar proposes to cross at least one waterbody and up to four additional waterbodies using a conventional bore, which is similar to the HDD method in that the pipeline is installed beneath a feature without surface disturbance to the feature during the crossing. However, the bore method differs in that the path of the pipeline across the feature is straight and is not variable or directional as in an HDD borehole where the path is curved or arched. The maximum length of a bore (hundreds of feet) is also much less than the maximum length of an HDD borehole (thousands of feet). Boring is frequently utilized at paved road and railroad crossings and is not a common crossing method for waterbodies primarily because of the difficulty in managing groundwater during the installation.

Boring requires excavation of pits on each side of the feature. Boring operations would require relatively large work areas, and well points or pumping for continuous dewatering operations, and may require continuous spoil/slurry processing throughout construction of the crossing. During a standard boring operation, spoil from the bore is carried into the pit as the crossing is being completed and then removed by trackhoes to provide room for the pipe to be welded and eventually pulled through the borehole. The operator for the boring machine, welders, and several laborers would work in the bore pit. Trench boxes or sheet piling may be used to support the pit walls and to help cut off groundwater inflows. Dewatering systems using deep wells or well points are frequently employed. The specific type of bore (e.g., jack and bore, slick bore, hammer bore) that would be utilized in a given area depends on the construction site characteristics, the type of soils present, and the contractor's familiarity with available methods.

Horizontal Directional Drilling

NorthernStar proposes to cross selected wetlands, waterbodies, and roads using the HDD construction method. This technique involves drilling a pilot hole under the waterbody, then enlarging that hole through successive reamings until the hole is large enough to accommodate the pipe. Throughout the process of drilling and enlarging the hole, a slurry made of naturally occurring non-toxic materials, such as bentonite clay and water, would be circulated through the drilling tools to lubricate the drill bit, remove drill cuttings, and hold the hole open. This slurry is referred to as drilling mud.

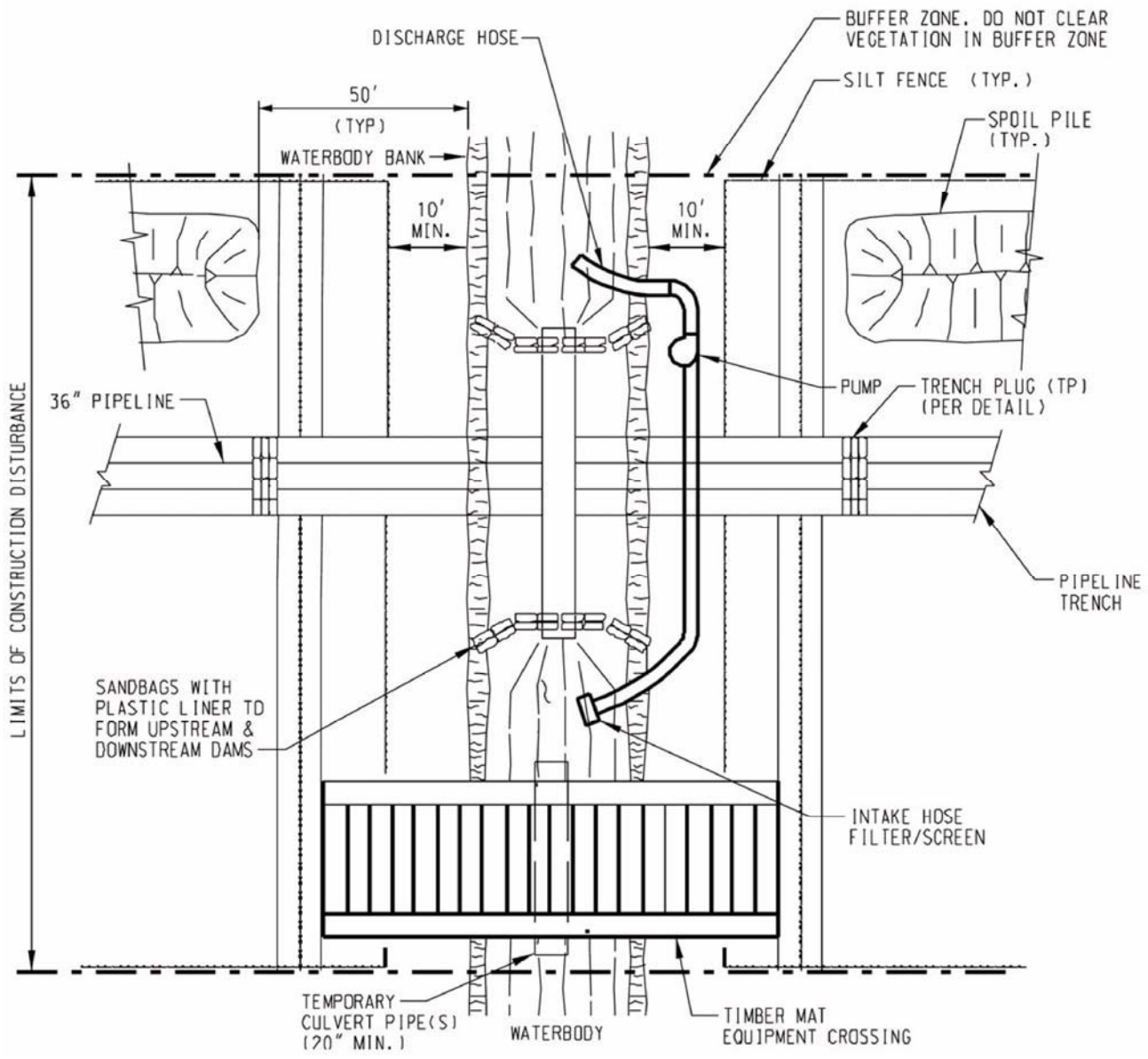

Figure 2.4.2-3
Bradwood Landing Project
Dam and Pump Waterbody Crossing Method

NorthernStar has indicated it would use a drilling mud consisting of 95 percent water and 5 percent bentonite. Pipe sections long enough to span the entire crossing would be staged and welded along the construction work area on the opposite side of the waterbody and then pulled through the drilled hole. Figure 2.4.2-4 shows a conceptual HDD waterbody crossing.

Roads and Railroads

NorthernStar would install the pipeline under major paved highways and railroads where traffic cannot be interrupted using the HDD or bore method. Both of these methods would proceed as they would for a waterbody crossing discussed above.

Smaller unpaved roads and driveways would be crossed by the traditional open-cut method. After construction, these roads and driveways would be restored. If an open-cut road crossing requires extensive construction time, NorthernStar would make provisions for temporary detours or other measures to allow safe traffic flow during construction. The pipeline would be buried to a depth of at least 5 feet below road surfaces and 10 feet below the toe of railroad embankments (or as otherwise required by the railroad company), and would be designed to withstand anticipated external loadings. Casings would be installed only where specifically required by permitting authorities.

Foreign Pipelines and Utilities

The proposed pipeline would cross several foreign pipelines. Additional foreign pipelines and other underground utilities are likely to be discovered during the preconstruction shallow hazards survey. Because of the relatively large size of the proposed pipeline and the soil cover and separation requirements, NorthernStar would cross under most foreign pipelines and utilities. Additional temporary workspace would be used at these crossings to accommodate the increased amount of spoil resulting from the need to excavate a deeper trench, and to prevent spoil and construction equipment from being placed over the existing pipelines. NorthernStar has indicated that it would ensure that the existing pipelines and utilities are not damaged during construction of its pipeline.

Agricultural Areas

NorthernStar would conserve topsoil in actively cultivated and rotated cropland, improved pastureland, non-saturated wetlands, and rangeland. NorthernStar would segregate a maximum of 12 inches of topsoil in these areas, as well as in other areas at the specific request of the landowner or land management agency. The topsoil would be temporarily stockpiled separate from the subsoil within the construction right-of-way. Where topsoil is less than 12 inches deep, the actual depth of the topsoil would be removed and segregated. The trench would be excavated to a sufficient depth to allow for at least 3 feet of cover on top of the pipe.

Residential Areas

NorthernStar's proposed construction work area (i.e., construction right-of-way and extra work areas) would be located within 50 feet of eight residential structures and three mobile homes. The locations of these residences are discussed in detail in section 4.7.3.3. NorthernStar would prepare site-specific residential construction mitigation plans that detail the specific measures that would be used when construction occurs near residences. In general, where residences are within 50 feet of the edge of the construction work area, NorthernStar would reduce the construction workspace to the extent practicable to minimize inconvenience to property owners. In some locations, the HDD method may be used to minimize surface disturbance to residences adjacent to the right-of-way. If construction requires the removal of private property features, such as gates or fences, NorthernStar would notify the

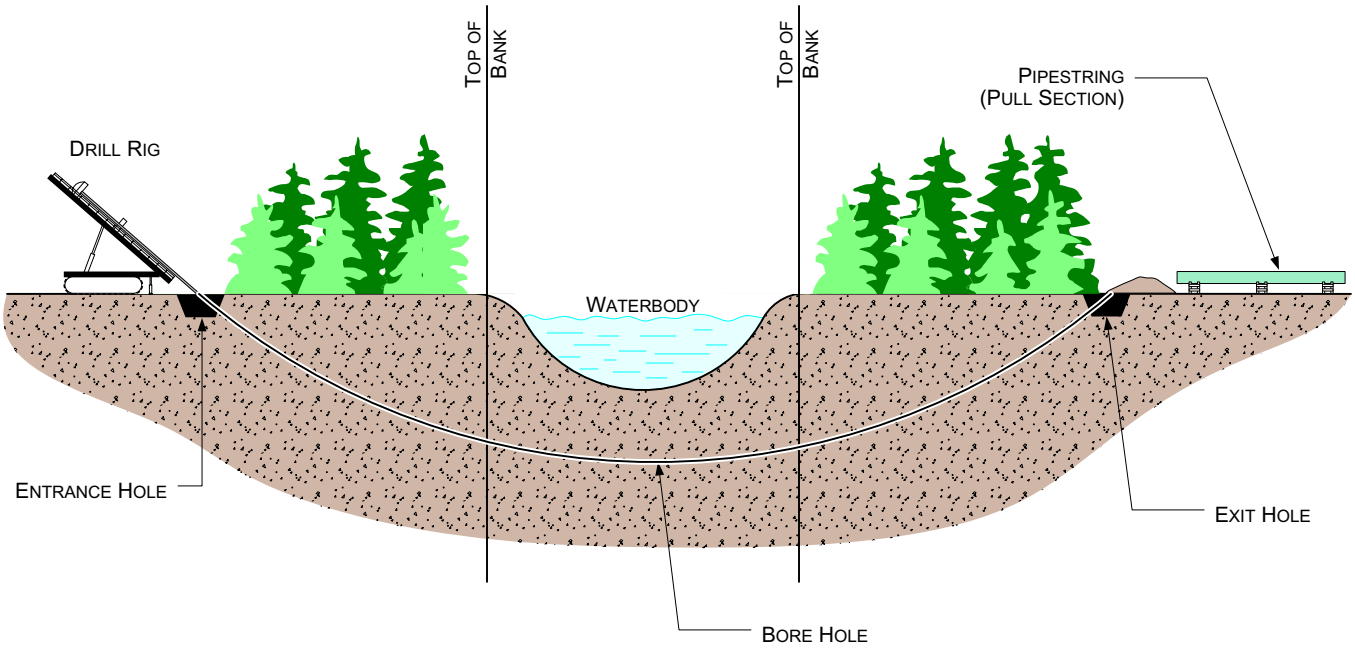

For environmental review purposes only.

Figure 2.4.2-4
Bradwood Landing Project
Conceptual Horizontal Directional Drill Waterbody Crossing

landowner or tenant before construction. After construction, the property would be restored as requested by the landowner, provided it does not interfere with NorthernStar's standards regarding right-of-way restoration and maintenance and is compatible with existing regulations. Property restoration would be in accordance with any agreements between NorthernStar and individual landowners.

Commercial and Industrial Areas

Impacts on commercial and industrial areas would be limited to the construction and post-construction restoration periods when construction activities could inconvenience business owners, employees, and customers. NorthernStar would coordinate closely with business owners to maintain access, decrease construction duration, and generally minimize impacts on these areas.

Rugged Terrain

Portions of the proposed pipeline would cross rugged terrain, consisting of steep slopes and substantial changes in elevation. Additional grading may be required in areas where the pipeline route crosses steep slopes. Steep slopes often need to be graded down to a gentler slope to accommodate pipe bending limitations. In such areas, the slopes would be cut away, and, after the pipeline is installed, reconstructed to their original contours during restoration. In areas where the pipeline route crosses laterally along the side of a slope, cut and fill grading may be required to obtain a safe, flat work terrace. Steep slopes may also require the installation of special erosion control measures, including trench breakers, slope breakers, interception dikes, and erosion control mats to prevent the movement of disturbed soil off the right-of-way.

Blasting

It is likely that shallow bedrock is present in some areas along the proposed pipeline route. Currently, NorthernStar expects that any subsurface rock that is encountered along the pipeline route could be trenched using conventional equipment (e.g., trackhoes, rippers, or rock trenchers). As such, the use of blasting for pipe trench excavation is not expected to be necessary. If blasting does become necessary, care would be taken to prevent damage to underground structures (e.g., cables, conduits, sewers, foundations, basements, and pipelines) and to springs, water wells, or other water sources. Blasting mats, soil cover, or other safety precautions would be used as necessary to prevent the scattering of loose rock. All blasting would be conducted during daylight hours and would not begin until occupants of nearby buildings, stores, residences, places of business, and farms have been notified and the area has been cleared of unauthorized persons. Only qualified and properly licensed personnel would be allowed to handle explosives and conduct blasting activities. All blasting would be conducted in accordance with applicable federal, state, and local codes and ordinances.

2.4.2.3 Associated Aboveground Facilities

Interconnect/Meter Station Sites

During installation of the interconnect sites, construction activities and storage of construction materials and equipment would be confined to the pipeline construction right-of-way or approved temporary workspace. NorthernStar would dispose of debris and waste generated during the construction and all disturbed surface areas would be restored.

NorthernStar would excavate as necessary to accommodate the new reinforced concrete foundations for the new metering equipment, pigging facilities, and buildings. Forms would be set, rebar installed, and the concrete poured and cured in accordance with applicable industry standards. Backfill

would be compacted in place, and excess soil would be used elsewhere or distributed around the site to improve grade.

Metering equipment would be delivered to the site by truck; unloaded using cranes, front-end loaders, or both, and positioned on the foundations, leveled, grouted where necessary, and secured with anchor bolts. After installation, all controls and safety equipment and systems, including ESD, relief valves, and gas and fire detection equipment, would be checked and tested, before being placed in service. Each of the interconnect sites would be fenced and graveled.

Pig Launchers and Receivers

A pig launcher would be installed at MP 0.0 at the LNG terminal. A pig launcher and receiver would be installed where the pipeline transitions from 36 inches in diameter to 30 inches in diameter at MP 18.8. A pig receiver would be installed at the Williams Northwest interconnect at MP 36.3. NorthernStar would install these facilities using the same standards and requirements established for construction of its proposed pipeline. The pigging facilities would be fenced and graveled after construction is completed.

Mainline Block Valves

MLVs would be installed at the pipeline origination at the pig launcher site within the LNG terminal, within the Williams Northwest interconnect site at the pipeline terminus, and within the pipeline right-of-way at several intermediate locations. The locations of the MLVs would be in accordance with the requirements in 49 CFR 192. NorthernStar would install these facilities using the same standards and requirements established for construction of its proposed interconnect sites and pipeline. The intermediate MLV sites would be fenced and graveled after construction is completed.

2.5 CONSTRUCTION SCHEDULE

No work would begin until all required permits and approvals are in place. NorthernStar indicates that it would require about 36 months to construct the proposed facilities. Construction and testing of the LNG tanks would require the most time. Construction of the pipeline and associated aboveground facilities would occur during the second year of constructing the LNG terminal facilities and require about 7 months to complete.

2.6 ENVIRONMENTAL COMPLIANCE INSPECTION AND MITIGATION MONITORING

In preparing construction drawings and specifications for the project, NorthernStar would incorporate mitigation measures identified in its application as well as requirements of federal, state, and local agencies. Contractors would also be provided copies of applicable environmental permits.

NorthernStar would conduct training for its construction personnel regarding proper field implementation of its terminal ESC Plan, our Plan and Procedures, other mitigation measures. Environmental training would be conducted before and during construction.

NorthernStar would be represented on each pipeline spread by a Chief Inspector, who would be responsible for quality assurance and compliance with mitigation measures, other applicable regulatory requirements, and company specifications. The Chief Inspector would be assisted by one or more craft inspectors and at least one full-time Environmental Inspector during construction of the pipeline. The Environmental Inspector would report directly to the Chief Inspector and would have stop-work authority. The Environmental Inspector's responsibilities would include:

- ensuring compliance with the requirements of the Plan, Procedures, the environmental conditions of the section 3 and Certificate authorization, the mitigation measures proposed by the applicant (as approved and/or modified by FERC's authorization), other environmental permits and approvals, and environmental requirements in landowner easement agreements;

- identifying, documenting, and overseeing corrective actions, as necessary to bring an activity back into compliance;

- verifying that the limits of authorized construction work areas and locations of access roads are properly marked before clearing;

- verifying the location of signs and highly visible flagging marking the boundaries of sensitive resource areas, waterbodies, wetlands, or areas with special requirements along the construction work area;

- identifying erosion/sediment control and soil stabilization needs in all areas;

- ensuring that the location of dewatering structures and slope breakers would not direct water into known cultural resources sites or locations of sensitive species;

- verifying that trench dewatering activities do not result in the deposition of sand, silt, and/or sediment near the point of discharge into a wetland or waterbody. If such deposition is occurring, the dewatering activity would be stopped and the design of the discharge would be changed to prevent reoccurrence;

- ensuring that subsoil and topsoil are tested in agricultural and residential areas to measure compaction and determine the need for corrective action;

- advising the Chief Construction Inspector when conditions (such as wet weather) make it advisable to restrict construction activities to avoid excessive rutting;

- ensuring restoration of contours and topsoil;

- verifying that the soils imported for agricultural or residential use have been certified as free of noxious weeds and soil pests, unless otherwise approved by the landowner;

- determining the need for and ensuring that erosion controls are properly installed, as necessary, to prevent sediment flow into wetlands, waterbodies, sensitive areas, and onto roads;

- inspecting and ensuring the maintenance of temporary erosion control measures at least:

    - on a daily basis in areas of active construction or equipment operation;
    - on a weekly basis in areas with no construction or equipment operation; and
    - within 24 hours of each 0.5 inch of rainfall;

- ensuring the repair of all ineffective temporary erosion control measures within 24 hours of identification;

- keeping records of compliance with the environmental conditions of the FERC certificate, and the mitigation measures proposed by the project sponsor in the application submitted to the FERC, and other federal or state environmental permits during active construction and restoration; and

- identifying areas that should be given special attention to ensure stabilization and restoration after the construction phase.

In addition, the FERC staff would conduct inspections to monitor the project for compliance with the Commission's environmental conditions and project mitigation measures proposed by NorthernStar or required by the regulatory agencies. To assist the FERC with its independent monitoring responsibilities during construction of this project, **we recommend that:**

- **NorthernStar should develop and fund a third-party environmental monitoring program to be implemented <u>during construction</u> of the Bradwood Landing Project. The program should allow for on-site, third-party compliance monitors representing the FERC to be present full-time during all pipeline construction phases, and periodically during LNG terminal construction, to ascertain that the project is being built as outlined in this EIS, and in accordance with the environmental conditions of the FERC Order. <u>Prior to construction</u>, NorthernStar should file a plan describing the third-party environmental monitoring program with the Secretary of the Commission (Secretary) for the review and written approval of the Director of OEP.**

Finally, other federal, state, and local agencies with jurisdiction or permitting authorities would conduct oversight inspections and monitoring to the extent deemed necessary by those agencies in order to meet their regulatory responsibilities.

2.7 OPERATION AND MAINTENANCE PROCEDURES

2.7.1 LNG Marine Traffic along the Waterway

Although LNG ships and their operation are directly related to the use of the proposed import terminal, they are not subject to the section 3 authorization sought in this application. The LNG ships arriving at the proposed LNG terminal must comply with all federal and international standards regarding LNG shipping. A detailed discussion of design and safety features of LNG ships is presented in sections 2.1.1.6 and 4.11.5.

LNG ships would enter the Columbia River under the navigational control of a Columbia River Bar Pilot; the control would transfer to a Columbia River Pilot at Astoria. The pilots would decide whether the tide, current, and wind conditions allow safe entry into the Columbia River and onward to the LNG terminal. The LNG vessel would transit the waterway with a two-tug escort, with three tugs used to maneuver the ship within the turning basin and dock at the terminal berth. The pilot would direct the securing of the lines and would turn navigational control back to the captain when the ship is fastened.

The Coast Guard’s WSR outlines conditions for LNG marine traffic in the waterway, including additional resources or assets that would be required prior to allowing LNG ships to transit up the Columbia River to the Bradwood Landing LNG terminal. Safety and security measures relating to LNG marine traffic are described in more detail in section 4.11.5.

The COE would be responsible for maintenance dredging of the navigation channel in the Columbia River. NorthernStar would be responsible for maintenance dredging of its turning basin and maneuvering area. NorthernStar estimates about 80,000 cubic yards of material would be removed from the maneuvering area every 2 to 4 years in order to maintain a depth of between 42 and 43 feet as part of maintenance dredging. NorthernStar expects the maintenance dredging would be carried out when the maneuvering area level reaches 42 feet CRD. Material from maintenance dredging would be deposited at the Wahkiakum County Sand Pit site located at the northern end of Puget Island (see section 3.1.9.2). Each round of maintenance dredging would take about 2 weeks and would be accomplished using a hydraulic cutterhead suction dredge. NorthernStar has requested a permit for maintenance dredging from the COE that would cover the first 5 years of the LNG terminal operation.

2.7.2 LNG Terminal Facilities

NorthernStar would operate and maintain its facilities in compliance with 49 CFR 193.2503 and 193.2605 and sections 11.3.1 and 11.5.2 of NFPA 59A, 33 CFR 127, and other applicable federal and state regulations. Before commencing operation of the LNG terminal, NorthernStar would prepare and submit for approval operation and maintenance manuals that address specific procedures for the safe operation and maintenance of the LNG storage and processing facilities. NorthernStar would also prepare an operations manual that addresses specific procedures for the safe operation of the ship unloading facilities in accordance with 33 CFR 127.305. Operating procedures would address normal operations as well as safe startup, shutdown, and emergency conditions.

All operations and maintenance personnel at the LNG terminal would be trained to properly and safely perform their assignments. The terminal operators would be trained in LNG safety, cryogenic operations, and the proper operation of respective terminal control equipment. The operators would be required to meet all the training requirements of the DOT, Coast Guard, and other applicable regulatory entities. Operating personnel would be on duty at the termina1 24 hours per day, 7 days per week. Three operators per shift would work in the control room. In addition, one or two operators would be available to perform manual operating tasks at the processing and storage areas.

NorthernStar would maintain a full-time, maintenance staff to perform routine maintenance and minor overhauls at the LNG terminal. Major overhauls and major maintenance activities would be handled by trained and qualified contract personnel. All maintenance activities, including scheduled preventative and predictive maintenance and unscheduled maintenance, would be managed through a computerized maintenance management system (CMMS). Scheduled preventative and predictive maintenance would be inputted into the CMMS before commissioning of each piece of equipment. Unscheduled maintenance would be entered into the CMMS by the qualified personnel identifying the need. NorthernStar would train all facility operations and maintenance personnel on the use of the CMMS.

2.7.3 Pipeline and Associated Aboveground Facilities

The pipeline and associated aboveground facilities would be operated and maintained in accordance with 49 CFR 192, *Transportation of Natural and Other Gas by Pipeline: Minimum Federal Safety Standards*, as required by the DOT. Section 4.11.9 presents a discussion of the DOT's safety regulations and requirements for natural gas pipelines and describes how these requirements would be met by the pipeline operator.

The pipeline would be inspected regularly by aerial patrols or on-the-ground personnel to observe general right-of-way conditions and to identify any indications of soil erosion that may expose the pipe, stressed vegetation that may indicate a leak in the line, damage to erosion-control structures, unauthorized encroachment onto the right-of-way, and other conditions that could present a safety hazard or require

preventive maintenance or repairs. All inspections would be in accordance with DOT standards. Appropriate responses to conditions observed during the periodic inspections would be taken as necessary.

The aboveground facilities would be inspected at intervals that meet DOT requirements. Pipeline personnel would perform routine checks of the facilities, including calibration of equipment and instrumentation, inspection of critical components, and scheduled and routine maintenance of equipment. Safety equipment, such as pressure-relief devices, fire detection and suppression systems, and gas detection systems, would be tested for proper operation. Corrective actions would be taken for any identified problem.

2.8 SAFETY CONTROLS

2.8.1 LNG Terminal Facilities

The LNG terminal facilities would be sited, designed, constructed, operated, and maintained in compliance with federal safety standards. The major federal siting and design requirements for LNG facilities are summarized in table 2.8.1-1.

TABLE 2.8.1-1

Federal Siting and Design Requirements for LNG Facilities

Requirement	Description
Thermal Radiation Protection (49 CFR 193.2057 and section 2.2.3.2 of NFPA 59A)	This requirement is designed to ensure that certain public land uses and structures outside the LNG facility boundaries are protected in the event of an LNG fire.
Flammable Vapor-Gas Dispersion Protection (49 CFR 193.2059 and sections 2.2.3.3 and 2.2.3.4 of NFPA 59A)	This requirement is designed to prevent a flammable vapor cloud associated with an LNG spill from reaching a property line that can be built upon.
Seismic Design (49 CFR 193.2101, and NFPA 59A)	This requirement outlines the necessary site specific seismic hazard study and specifies that critical safety-related components of the facility must be designed to survive earthquake ground motions estimated to have a 1 to 2 percent probability of occurring within a 50-year period.
Wind Forces (49 CFR 193.2067)	This requirement specifies that all facilities be designed to withstand wind forces of not less than 150 mph without the loss of structural integrity.
Impounded Liquid (section 2.2.3.8 of NFPA 59A)	This requirement specifies that liquids in spill impoundment basins cannot be closer than 50 feet from a property line that can be built upon or a navigable waterway.
Container Spacing (section 2.2.4.1 of NFPA 59A)	This requirement specifies that LNG containers with capacities greater than 70,000 gallons must be located a minimum distance of 0.7 times the container diameter from the property line or buildings.
Vaporizer Spacing (section 2.2.5.2 of NFPA 59A)	This requirement specifies that integral heated vaporizers must be located at least 100 feet from a property line that can be built upon and at least 50 feet from other select structures and equipment.
Process Equipment Spacing (section 2.2.6.1 of NFPA 59A)	This requirement specifies that process equipment containing LNG or flammable gases must be located at least 50 feet from sources of ignition, a property line that can be built upon, control rooms, offices, shops, and other occupied structures.
Marine Transfer Spacing (33 CFR 127.105)	This requirement specifies that each LNG unloading flange must be located at least 985 feet from any bridge crossing a navigable waterway.

2.8.1.1 Spill Containment

The LNG impoundment systems for the terminal facilities would be designed and constructed to comply with DOT regulations (49 CFR 193.2149 through 193.2185). These regulations require that each LNG container and each LNG transfer system be provided with a means of secondary containment that has been sized to hold the quantity of LNG that could occur as a result of the design spill that is appropriate for the area and LNG equipment. The design spills are defined in NFPA 59A.

The LNG storage tanks would use a full-containment design, consisting of an inner steel tank surrounded by a secondary outer concrete tank. The outer tank would be sized to contain 110 percent of the full design volume of the tank in the event that there is a complete failure of the inner tank. NorthernStar proposes to install a 5-foot-high, tertiary earthen berm around the LNG facility. The structure's volumetric capacity would contain a single LNG tank's maximum liquid capacity in the event of any hypothetical catastrophic event.

All LNG transfer lines would be provided with spill collection and containment troughs that would drain to either the jetty area containment basin or the tank area containment basin, each of which is equipped with a sump. Each sump would be sized to contain a 10-minute spill from one of the unloading lines at the maximum design transfer rate.

2.8.1.2 Hazard Detection System

A fire protection and gas detection system would be designed and installed at the LNG terminal in compliance with NFPA 59A and 49 CFR 193, as well as practices recommended by the ANSI and API. The design would take into consideration an evaluation based on sound fire protection engineering principles, analysis of local conditions, hazards within the facility, and exposure to or from other property.

2.8.1.3 Hazard Control System

Both passive and active measures for fire and hazard prevention or control would be incorporated into the design and construction of the LNG terminal. Passive measures would prevent or minimize a fire or hazard and would include spill impoundment systems, ignition source control, and fireproofing. Active control measures would be implemented in the event of a fire or the release of LNG and would include the following fire-fighting systems and equipment:

- a looped, underground fire suppression piping system that would use water from the Columbia River;
- 2 main firewater pumps located on the jetty;
- 16 fire hydrants;
- 14 fire hose reels within the administration/warehouse building and control building;
- 16 portable extinguishers for liquid, gas, or electrical fires; and
- 9 dry chemical extinguishers, 1 positioned on the jetty and 8 positioned on the LNG storage tanks.

2.8.1.4 Fail-Safe Shutdown

The proposed LNG terminal would have an ESD system that would isolate and shut off sources of combustible gas and automatically shut down process equipment. Three levels of shutdown would be configured for the LNG terminal facility. Level 1 would be used for a major incident and carry out a total plant shutdown. Level 2 ESD would only shut down the jetty unloading area, and Level 3 ESD would be used for shutting down individual pieces of equipment.

2.8.1.5 Security System

NorthernStar would develop a security plan for the LNG terminal that would be in accordance with 33 CFR 105 and 49 CFR 193. This plan would describe security inspections and patrols, liaisons with local law enforcement officials, design and construction of protective enclosures, lighting, monitoring, alternative power sources, and warning signs.

Security would be maintained for the entire site by personnel stationed 24 hours per day, 7 days per week. A high security fence would be constructed around the LNG facilities at the terminal site, with controlled access to the entrance gate and at the wharf. A guardhouse post would be located at the entrance gate. The security fence would be chain-link material approximately 10 feet high with barbed wire at the top. The fence would be monitored by security cameras and motion detectors and would be patrolled throughout the day and night. Security lighting around the facility would be provided as required to comply with 49 CFR 193, Subpart J Security.

2.8.2 Pipeline and Associated Aboveground Facilities

The pipeline and aboveground facilities associated with the Bradwood Landing Project would be designed, constructed, operated, and maintained in accordance with the DOT's *Transportation of Natural and Other Gas By Pipeline: Minimum Federal Safety Standards* in 49 CFR 192. These safety standards are discussed in section 4.11.9.1.

2.8.2.1 Corrosion Protection and Detection System

The pipeline would be protected from corrosion by a fusion-bonded epoxy coating. A cathodic protection system would also be installed to prevent or minimize corrosion. The system reverses the natural current flow from the pipelines to the ground, which could result in corrosion at imperfections in the pipeline coating. The cathodic protection system would be monitored and inspected periodically to ensure proper and adequate corrosion protection. The interior of the pipe would be periodically monitored for corrosion using internal in-line pigging technology.

2.8.2.2 Emergency Response Procedures

Pipeline system emergencies can include gas leaks, fire or explosion, and/or damage to the pipeline and aboveground facilities. In accordance with DOT regulations, NorthernStar would develop an emergency response plan (ERP) to address procedures to be followed in the event of an emergency along the pipeline. This plan would include training of employees on emergency procedures; establishing liaisons with appropriate fire, police, and other community officials; and informing the public on how to identify and report an emergency condition along the pipeline route.

2.9 FUTURE PLANS AND ABANDONMENT

NorthernStar has not identified any plans for expansion of the proposed LNG terminal or pipeline. However, if there is a future demand for additional natural gas in the market area, provisions have been made in the layout of the site to allow for a possible future expansion by adding a third LNG storage tank and associated equipment. This possible future expansion would increase the natural gas sendout capacity of the LNG terminal to 1.5 Bcfd. The proposed pipeline has already been sized for the maximum future capacity of 1.5 Bcfd; therefore, no other expansion of the pipeline facilities is planned at this time. Before any expansion of the proposed facilities, NorthernStar would be required to seek the appropriate authorization from the FERC. The FERC would conduct a separate environmental analysis under NEPA before authorizing a proposed expansion of NorthernStar's facilities.

NorthernStar has no future plans to abandon or remove the proposed LNG terminal and pipeline facilities. Based on economic projections, the facilities are expected to have an operating life of 30 to 40 years. If market conditions persist, the facilities could be maintained to operate for 50 years or more. Any future abandonment would be subject to the appropriate environmental and non-environmental review based on federal, state, and local regulations in effect at that time.