APPENDIX B

Need Determination for the Lake Elsinore Advanced Pumped Storage (LEAPS) Project's Talega-Escondido/Valley-Serrano 500-kV Transmission Line

This page intentionally left blank.

NEED DETERMINATION FOR THE LAKE ELSINORE ADVANCED PUMPED STORAGE (LEAPS) PROJECT'S TALEGA-ESCONDIDO/VALLEY-SERRANO 500-kV TRANSMISSION LINE

EXECUTIVE SUMMARY

The Final Application for License of the Lake Elsinore Advanced Pumped Storage Project (LEAPS) includes a proposal to build a 500-kilovolt (kV) transmission line interconnection from Southern California Edison (SCE) north of the project to San Diego Gas & Electric (SDGE) south of the project known as the Talega-Escondido/Valley-Serrano (TE/VS) 500-kV transmission line. This paper reviews available documentation about the need for the TE/VS transmission line between these two utilities and determines if consensus exists among the various stakeholders regarding the reliability of and economic need for this transmission line, its preferred location, and implementation timing.

California's existing transmission system links power generation resources with customer loads in a complex electrical network that must balance supply and demand on a moment-by-moment basis. An efficient and robust transmission system is required not only to help deliver the lowest-cost generation to consumers but also to stimulate competitive behavior in energy markets, pool resources for ancillary services, and provide emergency support in the event of unit outages or natural disasters. Some of the problems facing the transmission system in the area of the LEAPS Project include congestion on major paths, which prevents optimal economic operation of the system, and constraints such as power flow restrictions, which affect both the economic and reliable operation of the system, in major load centers such as San Diego.

Various state agencies and regional planning groups recently have studied the need for SDGE to import additional electric power beginning in 2005. Of these agencies and planning groups, the Southwest Transmission Expansion Plan (STEP), SDGE, and California Independent System Operators (CAISO) have conducted the most current and applicable studies.

The STEP studies conducted in 2003 indicate that a new 500-kV line into San Diego would be necessary to serve future load growth. Many STEP participants believe that the existing transmission system in this area is inadequate to fully deliver all the new generation that has been developed. By enhancing the capability of the transmission system, new, clean, and efficient generation would be available to service future load growth and replace older and less efficient generation.

The STEP examined several options for routing a new transmission line into San Diego, including several alternative routes from Imperial Valley into San Diego, known as the Imperial Valley-San Diego Expansion Plan (ISEP) Project, as well as the proposed TE/VS transmission line associated with the LEAPS Project. Detailed analyses (powerflow and stability) and economic (production costs) studies were conducted for

each of these options. The STEP found that neither project had annual benefits large enough to offset its costs; however, the STEP did not analyze the strategic project benefits[1] of these projects, which could improve the projects' economic outlook.

Korinek (2003) re-enforces the need to increase San Diego's import capability, which is currently limited to 2,850 megawatts (MW), to cover an estimated reliability deficiency of 291 MW in 2007. This deficiency, based on G-1/N-1[2] reliability criteria, is primarily due to the inability to permit the 500-kV Valley-Rainbow transmission line (Valley-Rainbow transmission line, which, from an electrical network viewpoint, is almost identical to the TE/VS transmission line), combined with increasing loads in San Diego.

In February 2002, the Office of Ratepayer Advocates (ORPA), under the California Public Utilities Commission (CPUC), completed its assessment of the Valley-Rainbow transmission line and found that the project affords negligible reliability benefits in at least the next 5 years (Sierra Energy & Risk Assessment, 2002). However, it appears that after SDGE performed additional analyses in 2003, SDGE can justify this project as marketable in the 2010 time frame, based on its ability to relieve transmission congestion and improve power import capability into the San Diego area.

In May 2004, Kyei (2004) completed, *Comparative Reliability Evaluation for Alternative New 500-kV Transmission Lines into San Diego*, a study that evaluated the relative reliability benefits of the TE/VS transmission line and the most technically desirable alternative for a new line from Imperial Valley into San Diego (i.e., the ISEP transmission line). The results of Kyei (2004) revealed that either the TE/VS transmission line or the ISEP transmission line would substantially increase the capability to import electricity (from 2,850 MW to 3,600 MW with all lines in service) to the San Diego area.

A combination of the TE/VS and ISEP transmission lines would provide additional benefits, such as a 3,800-MW import capability. SDGE's long-term plan is to

---

[1] Strategic benefits include reliability, load diversity, fuel diversity, access to lower cost power plants, firm power purchase, economy energy and surplus hydro purchases, power exchanges and reserve sharing.

[2] Specifically, the 500-kV Valley-Rainbow Project was proposed to mitigate a CAISO reliability criteria violation that could result from an overlapping outage involving the single largest generator and the single largest transmission line serving the San Diego area. The problem is known technically as a G-1/N-1 violation. The G-1/N-2 violation was identified through transmission planning studies that SDGE, the CAISO, and other parties conducted jointly as part of the CAISO grid planning process. Those studies for 2005–2010 showed that in the case of a heavy summer peak load, an outage of SDGE's largest generation project (Encina 5 at 329 MW) followed by an outage of the Southwest Power Link would result in a generation deficiency in the San Diego area, requiring the CAISO to drop customer load.

identify a way to connect the western end of the ISEP transmission line with the southern end of the TE/VS transmission line, creating one continuous path (see figure 4 in main text).

Based upon our review of available documentation, it appears that the TE/VS transmission line interconnection between the SCE and SDGE transmission systems would be an appropriate long-term solution to southern California's transmission congestion bottlenecks as well as the transmission-constrained, generation-deficient San Diego area. The TE/VS transmission line could provide 1,000 MW of import capability into the San Diego area with up to 500 MW of this import power being supplied by the LEAPS Project during high-demand periods.

This page intentionally left blank.

1.0 INTRODUCTION

This paper summarizes analyses of and testimony and reports about San Diego Gas & Electric's (SDGE's) proposed 500-kilovolt (kV) Talega-Escondido/Valley-Serrano (TE/VS) transmission line and determines if consensus among agencies and utilities exists regarding reliability and economic need for this new transmission line associated with the LEAPS Project. A brief discussion regarding this author's opinion of whether the TE/VS transmission line falls within the Federal Energy Regulatory Commission's (Commission's or FERC's) definition of a primary line is followed by information about the need for electric transmission and how the TE/VS transmission line would help this need, a general discussion of transmission path reliability and congestion and how these issues relate to SDGE's system, a discussion of generation deficiency along with SDGE's generation outlook, load demand forecast for SDGE through the year 2008, and SDGE's proposed solution for the demand for electricity.

In this paper, we draw upon information from documents about transmission lines prepared by the California Energy Commission, the California Public Utilities Commission (CPUC), the Electricity Oversight Board (EOB), the California Power Authority (CPA), the California Independent System Operator (CAISO), and SDGE.

1.1 PURPOSE

The Final Application for License of the Lake Elsinore Advanced Pumped Storage (LEAPS) Project includes a proposal to build a 500-kV transmission line interconnection from Southern California Edison (SCE) north of the project to San Diego Gas & Electric (SDGE) south of the project, referred to herein as the TE/VS transmission line. The TE/VS transmission line is SDGE's proposed alternative to the CPUC-denied Valley-Rainbow transmission line. Although the Valley-Rainbow transmission line and the TE/VS transmission line are often referred to as the Near-Term Interconnection (NTI) Project, in this paper, we refer to each project by their separate names.

California's existing transmission system links power generation resources with customer loads in a complex electrical network that must balance supply and demand on a moment-by-moment basis. An efficient and robust transmission system is required not only to help deliver the lowest-cost generation to consumers but also to stimulate competitive behavior in energy markets, pool resources for ancillary services, and provide emergency support in the event of unit outages or natural disasters. Some of the problems facing the transmission system in the area of the LEAPS Project include congestion on major paths, which prevents optimal economic operation of the system, and constraints such as power flow restrictions, which affect both the economic and reliable operation of the system, in major load centers such as San Diego.

Various state agencies and regional planning groups recently have studied the need for SDGE to import additional electric power beginning in 2005. Of these agencies

and planning groups, the Southwest Transmission Expansion Plan (STEP)[3], SDGE, and CAISO have conducted the most current and applicable studies.

The purpose of this report is to summarize the reliability and economic need assessments for the TE/VS transmission line associated with the LEAPS Project. We reference documentation prepared for the Valley-Rainbow transmission line because the TE/VS transmission line associated with the LEAPS Project is electrically similar, has similar reliability and need issues, and would receive similar technical and regulatory scrutiny (attachment 1).

1.2 POINT OF JUNCTION

To determine the portion of the TE/VS transmission line that would fall under the FERC definition of a project transmission line and therefore be included in the LEAPS Project's license application, a determination of where the project's point of junction occurs is necessary. The Commission's license must include all of the facilities necessary for the proper operation of the project including the project primary facilities or lines transmitting the project's power to the point of junction with the interconnected primary transmission system.

1.2.1 Project Transmission Line

The Commission defines a project transmission line as a transmission line that transmits power from a licensed waterpower project or other hydroelectric project authorized by Congress to the point of junction with the distribution system or with the interconnected primary transmission system. To understand the point of junction, we also need to know the definition of a distribution system and a primary transmission system.

A distribution system is the portion of an electric system that is used to deliver electric energy from points on the transmission or bulk power system to the customers. An interconnected primary transmission system is an interconnected group of electric transmission lines and associated equipment used to move or transfer of electric energy in bulk between points of supply and points at which the electricity is transformed for delivery to ultimate consumers, or is delivered to electric systems of others.

---

[3] STEP is a collaborative ad-hoc voluntary study group whose membership is open to all interested stakeholders. The organization, which was created by the CAISO, exists for the benefit of its members and the value that they derive in achieving planning, coordination and implementation of a robust transmission system between the Arizona, southern Nevada, Mexico and southern California areas. STEP has no staff and its members (i.e., stakeholders, project sponsors, transmission owners, regulatory agencies, and Regional Transmission Operator/Independent System Operators) complete the required work.

Simply stated, the Commission considers transmission facilities to be part of a distribution system or interconnected primary transmission system if the facilities are necessary to serve utility system customers or are necessary to perform another obligatory power system function. These other obligatory power system functions include:

- Improving system reliability,
- Reducing transmission grid congestion, and
- Reducing energy costs.

1.2.2 Project Primary Facilities/Lines

Only facilities that carry project power and are not part of the distribution or interconnected transmission system can be categorized as project primary lines. Similarly, the Commission considers transmission facilities as being primary project facilities if (1) they are necessary to get all of the project power to market, and (2) their continued existence is not assured because (a) they are not necessary to serve utility system customers, and (b) they are not necessary to perform another obligatory power system function.

1.2.3 500-kV Point of Junction

The Commission must ensure the permanence of all the transmission facilities needed to carry the project power to market. These permanent transmission facilities are the project primary lines that connect the project to the point of junction. This project has three probable outcomes regarding the definition of the point of junction depending upon which of the following scenarios occurs as the final outcome. The first two scenarios assume that the TE/VS transmission line is not licensed and is constructed separately from the LEAPS Project. The third scenario assumes that the TE/VS transmission line is licensed and is constructed separately.

1.2.3.1 Interconnection to the Northern Primary Transmission System

Extending a 500-kV transmission line from the LEAPS Project generators north to SCE's 500-kV Valley-Serrano transmission line would define the point of junction at a new substation approximately 16 miles west of the existing 500-kV Valley substation. The length of the project primary line under this scenario is approximately 14 miles.

1.2.3.2 Interconnection to the Southern Primary Transmission System

Extending a 500-kV transmission line from the LEAPS Project generators south to SDGE's 230-kV Talega-Escondido transmission line would define the point of junction at a new 500-kV/230-kV substation approximately 14 miles west of the previously proposed 500-kV/230-kV Rainbow substation. The length of the project primary line under this scenario is approximately 16 miles.

1.2.3.3 Interconnection to the Separately Permitted TE/VS Transmission Line

If the TE/VS transmission line is licensed and constructed separately from the LEAPS Project, the point of junction with the interconnected primary transmission system would move to the end of the short tap (less than 1 mile southwest) from the LEAPS 13.8-kV/500-kV powerhouse substation to the now separate TE/VS transmission line.

1.2.4 Change in Point of Junction Definition after Initial Determination is Made

If the interconnection is made to either the northern or southern route, as described above, and at a later time, the remaining southern or northern portion of the TE/VS transmission line is completed, the complete line would be able to carry non-project power requiring the Commission to amend the license to exclude all of the TE/VS transmission line, except the short segment from the powerhouse substation to the TE/VS transmission line.

1.2.5 115-kV Point of Junction

The LEAPS license application also includes two 115-kV ties to the existing Lake Elsinore 115-kV transmission system. It appears that these transmission lines would not fall within the licensing authority of the Commission because (1) the lines most likely would carry some non-project power in the form of loop flow, depending upon the configuration and power flow characteristics of the 115-kV grid; (2) the lines are not necessary to get all of the project power to market (the 500-kV system is designed for this purpose and the 115-kV system does not have the capacity to transmit all of the project power [500 MW] to the market); and (3) the lines may be necessary to perform another obligatory power system function. However, this condition alone does not qualify it as a primary project facility.

1.3 LEAPS PROJECT'S NEED FOR 500-kV VOLTAGE

The LEAPS Project will generate up to 500 MW of electricity during the day at peak energy-use times. At a minimum, the LEAPS Project would require a transmission line with enough capacity to transmit power from the power generation source to the point of junction with the interconnected primary transmission system. In this location, there are only two choices for transmitting this amount of power—a 230-kV line or a 500-kV line. Because of the much higher cost of building the line at either voltage level underground, only overhead construction has been considered. Power system engineers often use the concept of surge-impedance loading (SIL) as a convenient way of comparing the approximate load-carrying capability of lines of different voltage levels. SIL is approximately equal to loading where the line's loss in reactive power due to load current is equal to the reactive power generated by its capacity. Figure 1 below illustrates the relationship between the power transmission capacity of a single conductor/phase

500-kV transmission line over various line lengths versus transmitting the same power over a single conductor/phase and a two-conductor/phase 230-kV transmission line.

Figure 1 indicates that at a line length of approximately 30 miles, the 500-kV voltage line would transmit greater than 2,000 MW, the single conductor 230-kV line would transit less than 500 MW, and the two conductor 230-kV line would transmit slightly more than 500 MW. Although SIL gives a general idea of the load capability of a line, it is usual to load short lines (300 miles or less) appreciably above the SIL. For a 30-mile-long line, this could be a 200 percent to 250 percent increase in loading above that shown in figure 1. Therefore, strictly from a line loading point of view, either the 230-kV or 500-kV voltage would be acceptable to transmit the project's 500 MW into the utility grid.

The next issue to address is where the Commission-defined point of junction occurs and the voltage that would be the most appropriate to use.

1.3.1 Southern Point of Junction

If the point of junction ultimately occurs at the southern tie point, a voltage selection of 230-kV might be justified; however, because the SDGE expansion plan calls for the addition of this line at 500-kV, it is likely that this line would be constructed on a 500-kV right-of-way width using 500-kV towers and insulators producing little cost difference from the 500-kV option. The 230-kV plan would also result in greater reactive power[4] requirements and increased system losses. See the section 3.0, *Conclusions*, for more detail about using 230-kV as the selected voltage.

---

[4] Reactive Power is an abstract quantity used to describe a certain type of power flow in an electric power system. It is measured in reactive volt-ampere's (VAr) not watts. In an alternating current (AC) system both the current (I) and voltage (V) are sinusoidal. Useful power (P) is the product of the current and voltage (e.g., P = I * V) and is measured in watts. If there is a phase separation between the current and voltage, the total power (VA) will have to "work harder" to produce the equivalent useful power if they were in phase. Reactive power is described as the amount of power required to overcome the phase shift between the current and voltage. It is generally regarded as waste power because it is used to "energize" the circuit to allow it to do useful work. Substantial effort is made to control the reactive power levels to minimize costs. This is typically accomplished through automatic switching of capacitors and reactors.

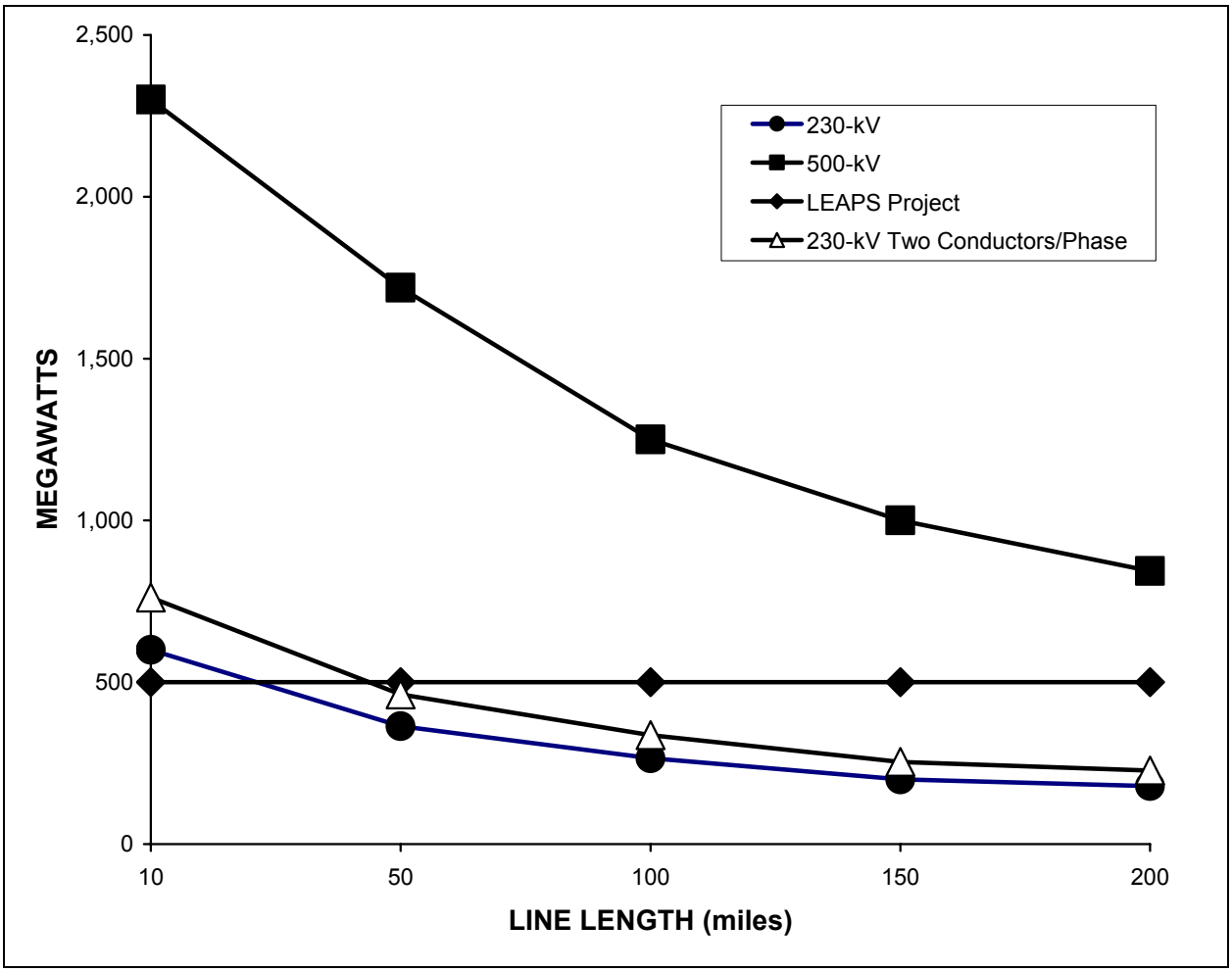

Figure 1. Electric power transmission capacity limitations based on surge impedance loading.

1.3.2 Northern Point of Junction

If the point of junction ultimately occurs at the northern tie point, a voltage selection of 230-kV cannot be justified based on an economic basis because no 230-kV source exists at SCE's Valley substation. A 230-kV option would require construction of a 500/230-kV substation at or near the Valley substation or connection to SCE's Mira Loma or Dever's 230-kV substation at much higher costs since these substations would require a longer 230-kV transmission line connection. See section 3.0, *Conclusions*, for more detail about using 230-kV as the selected voltage.

1.3.3 Interconnection to the Separately Permitted TE/VS Transmission Line

If the point of junction ultimately would occur at the separately licensed and constructed TE/VS transmission line at a location less than 1 mile south west from the LEAPS powerhouse substation, a voltage selection of 230-kV still would not appear to be justified because any savings that could be realized when building a 1 mile length of

230-kV transmission line, rather than a 500-kV transmission line, would be overcome by the additional cost of building two substations; one substation would step the generator voltage up to 230-kV the second would step the voltage up from 230-kV to 500-kV.

1.4 NEED FOR A NEW 500-kV TRANSMISSION LINE

Major transmission lines undergo considerable regulatory review and a lengthy permitting process. Because of the length of the planning, assessment, licensing, and construction processes for transmission line facilities and the rapidly disappearing corridor options, CAISO and SDGE recommend, as a minimum, licensing the TE/VS transmission line as soon as possible because of the imminent need for reliable import of electricity into the San Diego area and the rapidly disappearing opportunities for procuring new right-of-way corridors.

The exact timing of when the TE/VS transmission line would be needed is not clear from an economic need standpoint because of the lack of market models to adequately forecast and "prove" its need and to justify this project as a market-driven economically beneficial project. However, the need for the transmission line appears imminent to meet anticipated electrical demands in the 2010 time frame.

Previous attempts to license an electrically equivalent 500-kV transmission line on a different right-of way were denied for various reasons, including uncertainty about future benefits and evaluation methodologies that did not recognize the strategic value of transmission, present worth valuation that discounted the long-term benefits of long-lived transmission assets, and use of average conditions in long-term planning studies that discount the substantial insurance benefits[5] of transmission projects (attachment 1).

SDGE proposes to use the TE/VS transmission line as an alternative to the CPUC-denied Valley-Rainbow transmission line to provide the following benefits:

- Meet current and future reliability needs as defined by Western Electricity Coordinating Council,
- Provide access to renewable energy resources,
- Potentially reduce energy costs for the citizens of California,
- Remove congestion on the existing bulk power system,
- Greater access to potentially lower-cost and diverse energy resources,

[5] Insurance benefits are those derived from a transmission line's ability to lessen the impact of an event that has an unacceptable impact on the power system, no matter how unlikely the occurrence of this event may be.

- Reduce reliability must run (RMR)[6] costs, and
- Balance resource plan.

Our discussion focuses on the ability of both the TE/VS transmission line and the LEAPS Project to meet reliability needs, provide access to renewable and other energy resources, and relieve transmission congestion.

1.4.1 Transmission Reliability and Congestion

Transmission congestion, which ultimately causes higher transmission delivery costs, occurs when the amount of power that can be transferred over a line or path is constrained by the operating limit of the line or path. For example, congestion limits the amount of relatively low-cost electricity that can be imported into California from the Pacific Northwest or the Desert Southwest, or between major load centers in California. As a result, more expensive in-state or local generation sources must be used to meet load demands. The CPUC has identified the San Diego area as a transmission-constrained area, an area that must rely heavily on local generation to meet power needs because of a shortage of capacity on transmission lines to import power when needed.

1.4.1.1 General

The addition of new generation resources to a grid can create new congestion problems or aggravate existing ones, both affect the reliability of the system. When a new power plant is proposed, the Participating Transmission Owners (PTOs) and CAISO evaluate if the power plant's interconnection to the transmission grid would adversely affect system reliability. Downstream reliability effects typically occur when new generators connect to the transmission system overloading transmission lines, transformers, circuit breakers, and other system components and causing violations of accepted reliability criteria.

Violation of these reliability criteria can result in system outages. Some reliability criteria violations may be mitigated by employing measures that would curtail generation from the new power plant during emergency conditions. Other violations may require transmission line expansion or replacement, or the addition of transformers, circuit breakers, or other system components. At some point, it becomes necessary to identify more costly long-term solutions, such as transmission expansions, to address congestion problems. Analyses of the SDGE system indicate that during peak-loading periods, it is anticipated that the existing import capabilities would be transmission-constrained.

---

[6] To prevent potential market power abuses, the CAISO requires key generators to sign RMR contracts that require the generators to operate at specific fixed prices during times specified by the CAISO. An important issue is anticipating higher than expected increases in RMR costs in the SDGE area.

1.4.1.2 SDGE

The San Diego area has about 2,300 MW of local or in-basin generation. With a peak load of about 4,500 MW, the San Diego area must import electricity from outside its area to meet the major portion of its peaking requirements. The following three major transmission paths[7], Path 44, the Southwest Power Link, and Path 45, supply these requirements (see figure 2).

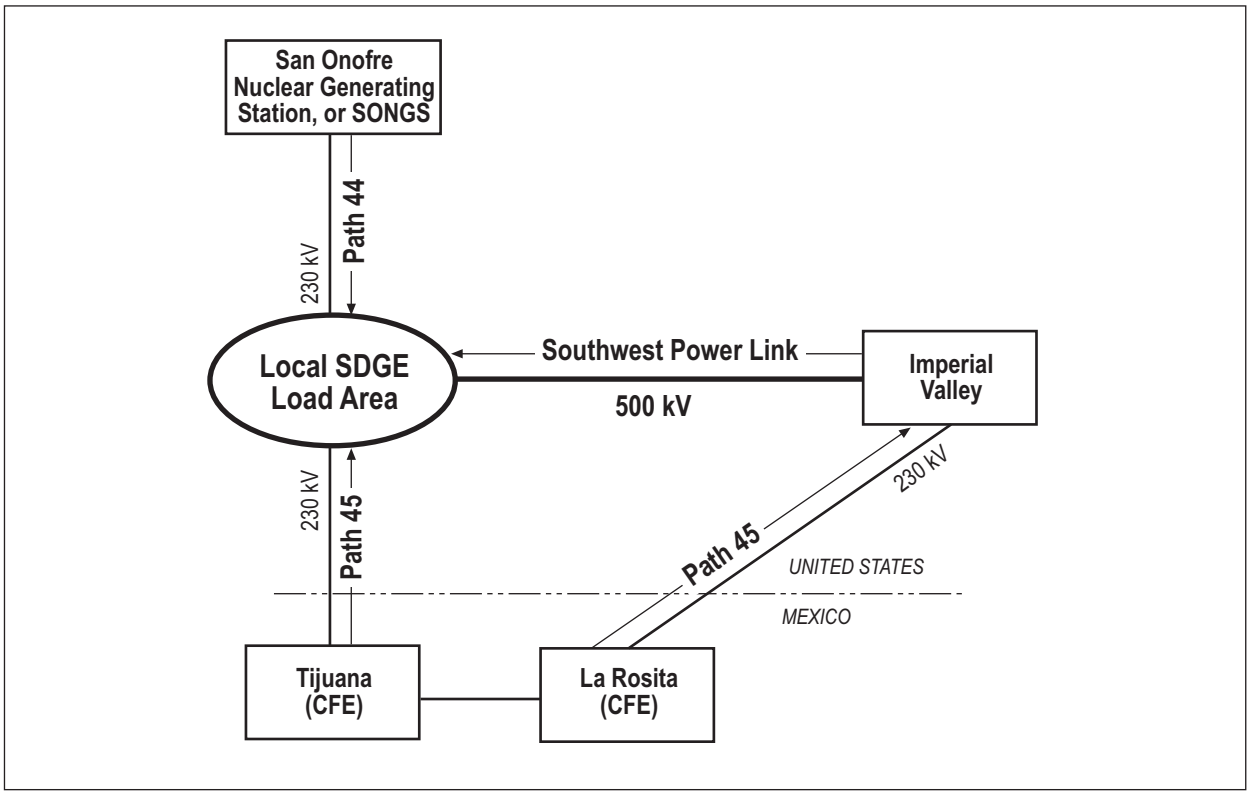

Figure 2. SDGE transmission import paths.

- Path 44, consisting of five 230-kV transmission lines, connects San Diego with the San Onofre Nuclear Generating Station (SONGS) and is San Diego's only major connection with the CAISO grid. The five lines have a transfer capability of approximately 2,200 MW.
- Southwest Power Link, the second connection, is the 500-kV transmission system that connects San Diego to generation resources in Arizona via the North Gila and Imperial Valley substations.
- Path 45, which connects SDGE to northern Mexico, is a system of 230-kV transmission lines that run north-south and connect SDGE to the Commission

[7] A transmission path is one or multiple transmission line(s) connecting a CAISO-designated local reliable area to the transmission grid.

Federal de Electricidad (CFE) system and transmission lines that run east-west across Baja California. Path 45 has a path rating of 400 MW during heavy peak summer conditions and 800 MW winter peak.

1.4.2 Generation Deficiency

Generation-deficient areas are RMR[8] areas that lack sufficient generation to meet expected demand. Deregulation resulted in the majority of the generating plants being sold to third parties that did not have this requirement as part of their purchase of the plants. To maintain local area reliability, the ISO created RMR contracts to ensure generating plant availability. In general, the RMR contracts give the ISO the right to call on the units for a specified price. CAISO (2004) provides additional details about California's RMR methodology.

Generation-deficiency combined with a transmission-constrained condition makes an area extremely vulnerable to disruptions of internal generation supplies and disruptions of transmission facilities supplying imports from outside of the service area. Generation deficiency is more important to address than transmission constraints because generation-deficient areas are more likely to sustain low-reserve margins, which would defer retiring a unit. One can retire a unit in a transmission-constrained area provided the area has a sufficient reserve margin.

1.4.3 SDGE's In-basin Generation Supply

CAISO classifies San Diego as a local reliability area and as an RMR area. As a local reliability area, San Diego is characterized by limited in-basin generation (i.e., the generation within the San Diego area that is not reliant on imported energy) and by limited transmission access to generation resources outside the area. During the CPCN hearings for the Valley-Rainbow transmission line, parties discussed the supply forecast and reviewed existing in-basin generation, anticipated new (i.e., from project that are licensed) and proposed (i.e., pre-licensed projects) generation and anticipated retirements. The availability of several projects was discussed in the hearings and debated by the parties, including South Bay Unit 4, Encina, Ramco peaking units, Navy units, Otay Mesa Project, and proposed power plants in Baja California, Mexico. The decision acknowledged that there was much uncertainty about anticipated new and proposed generation and future retirements. Some of the issues raised are discussed below.

---

[8] Prior to deregulation of the electric industry in California, the individual PTOs had full control of all their generating plants. If a Grid Planning Criteria Violation was found, it was possible to eliminate the violation by either building new transmission lines or ensuring that a particular generating plant was on-line. The PTOs would then look at the economics of building new transmission lines against ensuring that the generating plant would be available to run. In a many cases, the availability of the plant was the preferred solution because the PTO had the ability to ensure that the plant was available.

1.4.3.1 Existing SDGE Basin Generation

SDGE has 2,348 MW of in-basin generation available in the San Diego area, including 1,635 MW of gas-fired, base-load generation at the Encina and South Bay facilities; 215 MW of combustion turbines; 220 MW of peaking facilities; and 175 MW of cogeneration. The 1,635-MW Encina and South Bay facilities are relatively older, inefficient, and only marginally competitive facilities compared to new generation facilities coming online outside of the San Diego area. Further, all but 220 MW of the 1,635 MW from the Encina and South Bay facilities are classified by the CAISO as RMR output, and these facilities must perform as directed by CAISO contracts.

1.4.3.2 Retired Generation

SDGE raised concerns before the CPUC about the future of much of San Diego's in-basin generation. In a petition to the CPUC concerning its decision about the Valley-Rainbow transmission line, SDGE raised concerns about the status and availability of a number of existing generation facilities, the status of the Otay Mesa Project, and the cost of future RMR contracts. Duke Energy placed its South Bay Unit 4 (221 MW) in cold storage in early 2003 until further notice. Duke's rationale for this step was the inability of South Bay 4 to compete effectively, especially in the face of anticipated new power plants such as Otay Mesa and Palomar. Another consideration in choosing to temporarily mothball South Bay 4 may be that the unit was not selected by the CAISO for an RMR contract for the 2003 period. In addition to the Encina Project, there is also a concern that because of age, efficiency problems, competitive pressures, and environmental issues, the owners of Encina and South Bay facilities may opt to retire more of those units as newer and more efficient generating units come on-line.

1.4.3.3 Anticipated New Generation

Three large new generation projects with more than 2,200 MW of gas-fired generation could be available to the San Diego area in the 2005–2006 time frame. These projects include:

- new projects with 1,000[9] of generation located near Mexicali in northern Mexico and scheduled for commercial operation by mid-2003;
- 510-MW Otay Mesa Project located in southern San Diego County; and
- 546-MW Sempra Palomar Project, which was approved by the California Energy Commission on August 6, 2003.

SDGE has signed interconnection agreements for power from both the Otay Mesa Project and the new projects near Mexicali, Mexico. The three projects could provide SDGE the new generation necessary to accommodate additional basin retirements and

[9] SDGE only has contracted for 1,000 MW of the plants' total output of 1,500 MW.

provide additional reliability margins in the event that new transmission facilities are not permitted by the CPUC.

SDGE's peak load demand forecast, which determines the magnitude of its congestion problems and the general timing of proposed longer-term transmission expansion solutions, is discussed below.

1.4.4 Demand Forecast

In the review of the Valley-Rainbow transmission line during the CPCN hearings, the CPUC held that the 5-year demand forecast currently used by SDGE should be applied. SDGE and CAISO had argued that a 10-year demand forecast would be more appropriate; however, the CPUC concluded that forecasts of both generation supply and demand are more uncertain when moving beyond 5 years and that greater uncertainty exists with a longer planning horizon. SDGE noted in the hearings that the demand might have been skewed as a result of conservation efforts that occurred after the blackouts in 2001. Numerous reports prepared for the California Energy Commission regarding transmission project planning and policy as well as STEP and CAISO analyses indicate that the 5-year period for transmission planning does not appear to be adequate in addressing transmission planning and policy issues. A more appropriate planning horizon would be 8 to 10 years (EPG and CERTS, 2003).

1.4.5 Long-term Outlook of Supply and Peak Demand for 2004–2008

SDGE's computation of its local reliability need is summarized for 2005 through 2008 in table 1. These data were taken from attachment 3 to D. Korinek's testimony filed April 15 2003 (Korinek, 2003). Line A shows SDGE's one-in-ten-year peak weather forecast, Line B shows SDGE's import limit given its single largest transmission contingency (N-1), and Line C shows generation within SDGE's service territory given its single largest generation contingency (G-1). Line D, was computed by adding the figures from Lines B and C and subtracting the value from Line A, shows the amount of new generation or import capability that SDGE would need each year to meet its local reliability criterion. Line E shows the impact of the addition of substantial transmission facilities on SDGE's local reliability needs. Reduced local generation needs are shown in Line F, which reflects the assumption that substantial new transmission investments are available at this time.

Table 1. SDGE's computation of its local reliability need. (Source: Korinek, 2003)

Description	Year 2005	2006	2007	2008	Formula
A. One in ten load forecast	4,504	4,624	4,726	4,844	
B. Existing import limit with N-1	2,500	2,500	2,500	2,500	
C. Existing in-basin generation with G-1	1,935	1,935	1,935	1,935	
D. Reliability need (G-1 / N-1)	–69	–189	–291	–409	B + C – A
E. Transmission addition	0	0	0	700	
F. Reliability surplus / Deficiency	–69	–189	–291	–291	D + E

Note: Negative values indicate a deficiency in generation and import availability.

In prepared direct testimony on SDGE's Grid Reliability Capacity Request for Proposal, Mr. Kevin Woodruff, Principal of Woodruff Expert Services, states that upon review of SDGE's load forecast and projected area resources, he finds that the projected load growth (2.8 percent per year) during the period from 2004 to 2008 is higher than that for the years thereafter, which is 1.9 percent per year. In addition to the excessive load growth, he believes that substantial adjustments to the projected area resources (additional generation) could reduce or defer SDGE's purported local reliability need beyond 2007, also deferring the need for substantial new transmission investments (Woodruff Expert Services, 2004).

Mr. Woodruff's testimony is reflected by Mr. David Geier, Vice President of SDGE's Electric Transmission and Distribution, in an August 2004 presentation before the California Energy Commission. Mr. Geier stated that SDGE could need a new 500-kV transmission line as early as 2010 for reliability and interconnection of renewable and other energy resources. Mr. Geier also mentioned that the timing for this project is subject to many variables, including demand projections and generation additions and retirements.

This page intentionally left blank.

2.0 PROPOSED SOLUTION

2.1 TE/VS TRANSMISSION LINE

The LEAPS Project would use more than 500 MW of electricity to pump water from Lake Elsinore at night and generate 500 MW of electricity during the day at peak energy-use times. Elsinore Valley Municipal Water District and the Nevada Hydro Company propose to connect to a newly constructed 500-kV transmission line (see figure 3) approximately 30 miles long traveling north of the project connecting to an existing transmission line owned by SCE (the 500-kV Valley-Serrano transmission line) and running south of the project to existing transmission lines owned by SDGE (the 230-kV Talega-Escondido transmission line).

SDGE proposes to use the proposed TE/VS transmission line as an alternative to the CPUC-denied Valley-Rainbow transmission line to interconnect the its existing 230-kV transmission system at a new substation in northern San Diego County with the existing SCE Serrano-Valley 500-kV transmission system in western Riverside County (see figure 4).

Following are the major elements of the proposed TE/VS transmission line:

- A new 30-mile-long 500-kV transmission line with an approximate 1,000 MW rating that interconnecting a new SDGE Talega-Escondido substation to a new SCE South Valley substation;
- A new NTI substation that interconnects the proposed TE/VS transmission line with the SDGE's existing 230-kV and 69-kV transmission systems;
- A new South Valley substation that interconnects the proposed TE/VS transmission line with SCE's existing Serrano-Valley 500-kV transmission line;
- A new Talega-Escondido 230-kV transmission line that loops into the new NTI 500-kV substation;
- New 500-kV transformers at NTI substation; and
- Additional SDGE 230-kV and 69-kV system improvements.

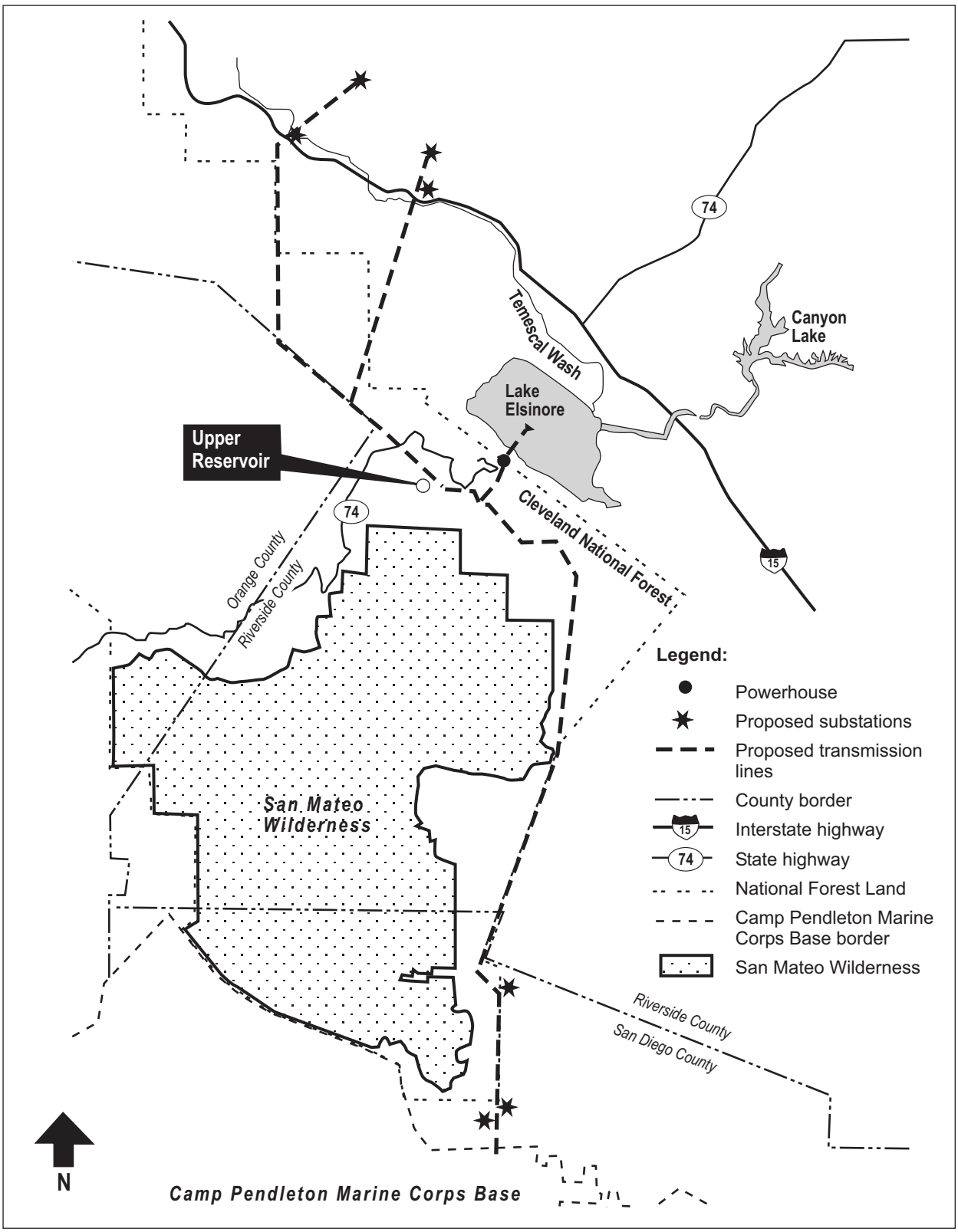

Figure 3. LEAPS Project—proposed project facility locations.

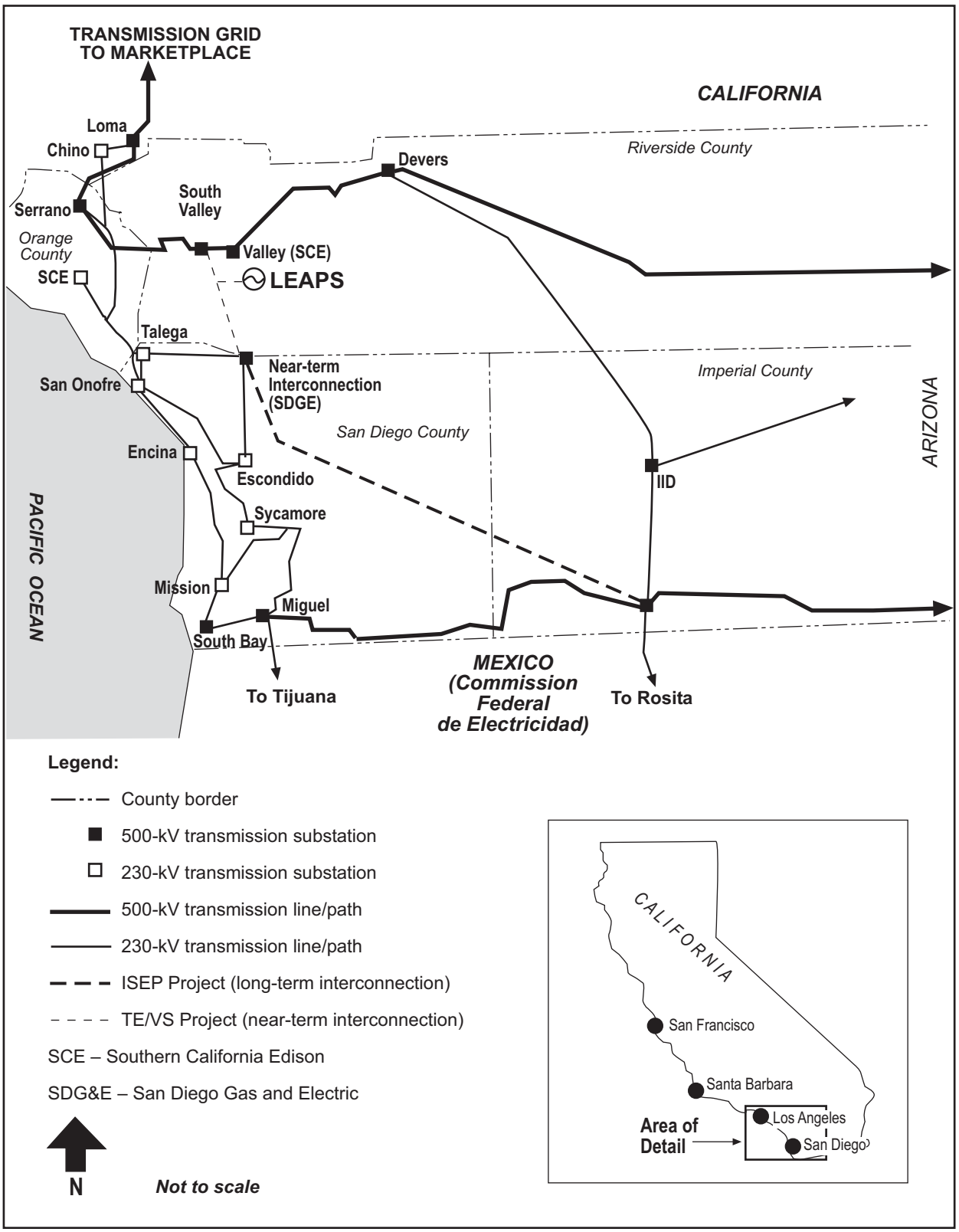

Figure 4. 500-kV long-term interconnection. (Source: Korinek, 2003, as modified by staff)

2.2 PROPOSED IMPLEMENTATION

SDGE's reliability problems largely have resulted from the load and generation characteristics of the San Diego electricity system. CAISO has classified SDGE as a local reliability area and as an RMR area. As a local reliability area, San Diego has limited in-basin generation and limited access to generation resources outside the area. These limitations make the area extremely vulnerable to supply disruptions of internal generation and imported power. Because of limited generation resources, SDGE's electricity markets also lack sufficient competitiveness to prevent the exercise of market power by key generators under certain peak loading conditions.

To prevent potential market power abuses, the CAISO requires key generators to sign RMR contracts that require them to operate at specific fixed prices during times specified by the CAISO. An important issue is anticipating higher than expected increases in RMR costs in the SDGE area. This issue was raised by SDGE after the December 19, 2002, denial of the CPCN when SDGE filed a Petition to Modify the Valley-Rainbow Decision and a Petition for Rehearing. The CPUC findings in the decision indicated that for purposes of G-1/N-1 reliability criteria planning, existing in-basin generating units should be assumed to continue to be available during the critical planning period (5 years) in the absence of specific convincing evidence to the contrary. The CPUC decision denied the project a CPCN without prejudice saying the project was not needed at this time because SDGE will continue to meet the WECC/NERC reliability criteria during the relevant planning horizon (5 years) and that the project cannot be justified on the basis of providing economic benefits to ratepayers.

It appears that strong consideration should be given to a 10-year relevant planning horizon and that the economic benefits of the project should be evaluated as discussed in CAISO and LE (2003), *A Proposed Methodology for Evaluating the Economic Benefits of Transmission Expansions in a Restructured Wholesale Electricity Market*.

Whether or not the TE/VS transmission line is needed for reliability under the N-1/G-1 criterion requires a comparison of the expected demand for electricity in the SDGE service are (generally referred to as load) and the expected availability of electricity in that service are (generally referred to as resources). The resources available to serve load consist of electricity generated by in-area power plants and electricity generated at out-of-area- power plants and imported into the area on transmission lines. The N-1/G-1 criterion tests whether available resources will service peak load when the largest local generation[10] resource is unavailable and the most critical transmission line suffers an outage.

In SDGE's service area, the Encina power plant (Unit 5) is the most significant (largest) in-area generator. Loss of this unit is the G-1 condition. An outage along the Southwest Power Link between the Imperial Valley Substation and the Miguel Substation

[10] A standard WECC criteria.

is the utility's most critical transmission network element outage. Loss of this line is the N-1 condition. The N-1/G-1 reliability criterion provides that SDGE should be able to continue to serve load even when the Encina Unit 5 or an equivalent amount of local generating capacity is off-line and the Southwest Power Link between the Imperial Valley Substation and the Miguel Substation.

In testimony before the CPUC in February 2002, Sierra Energy & Risk Assessment (2002) believes that because of SDGE's lack of certainty over the timing of new generation development in or near its service territory, SDGE considered its only option was to construct a new transmission addition. Sierra Energy & Risk Assessment (2002) additionally protests that SDGE's only justification for the TE/VS transmission line appears to be based on is its belief that it cannot control the generation market; therefore, its only means to ensure adequate generation for customers is to significantly increase import capability.

Furthermore, Sierra Energy & Risk Assessment (2002) stated its belief that the transmission solution is a mutual benefit to both SDGE and CAISO but not necessarily the ratepayers as follows:

> The ISO operates the transmission grid and performs the dispatch function, but it does not own transmission or generation facilities. SDGE owns its transmission lines and its retained generation facilities, but has no ability (at the present) to build new generation facilities. The ISO will naturally welcome all transmission additions that improve its ability to operate the system reliably. The utility's (SDGE) only option to meet system needs that it can control and also earn a return on is the transmission investment. At the same time, ratepayers have no assurance that transmission is the least cost answer to SDGE's electric system needs, because neither the ISO nor the utility have examined alternatives to the Project.

Subsequently, November 2002, SDGE prepared and filed the *Valley-Rainbow Interim Preliminary Report on Alternatives Screening* where it identified and screened approximately 45 alternative ranging from minor routing adjustments to alternative system voltages, system designs, and routing options, as well as non-wires alternatives (CPUC, 2004).

In an April 2003 presentation at the Integrated Energy Policy Report Committee Workshop, SDGE's Transmission Planning Manager, David Korinek, stated that the SDGE system is a generation-deficient, transmission-constrained area with its import paths limited to 2,500 MW on Path 44 and 1,120 MW on the Southwest Power Link (figure 2).

Import issues were debated in the CPUC hearings for the CPCN. The CPUC concluded in their decision that CFE will have a strong incentive to upgrade the capacity of its east-west transmission lines in order to make room for its own east-to-west transfers and these upgrades will increase the ability of SDGE to rely on through-flow and exports

from Mexico in the future. However, these issues were not supported by SDGE, or the CAISO, nor were they addressed as findings in the Alternate Decision by Commissioner Duque (Aspen Environmental Group, 2004).

Because of its generation-deficient, transmission-constrained area, SDGE issued a request for proposal (RFP) for bids to meet energy needs in the San Diego region beginning in 2005. The RFP invited prospective bidders to respond with proposals for demand reduction and renewable or fossil-fuel plants under a 10-year power-purchase agreement. SDGE received roughly 3000-MW of potential bids that came from outside of their service area: 2,600 MW from the SCE service area and 600 MW from the Salton Sea.

It is Mr. Korinek's opinion that none of this renewable power can be imported into the San Diego area due to the congestion of the existing paths until the year 2010. However, there are two projects that could address this problem prior to that time:

1. Transmission associated with the LEAPS Project could possibly provide 1,000 MW of import capability (200 MW of solar power and 25–50 percent of the 2,400 MW of wind power) into the San Diego area. This value would be reduced depending upon the level of generation provided by the LEAPS Project.
2. The ISEP transmission line, which is a new line from the Imperial Valley in parallel with the exiting 500 Southwest Power Link into the San Diego area, could potentially import 600 MW of geothermal renewable energy from the Salton Sea.

SDGE's long-term plan is to identify an environmentally permittable and economically feasible method of connecting these two projects together, i.e., the southern end of the LEAPS 500-kV line to the western end of the new Imperial Valley to San Diego 500-kV line, creating one continuous path (figure 4).

The STEP has analyzed the LEAPS Project separately and in conjunction with the Imperial Valley-to-San Diego transmission alternatives. Neither project was found to have annual benefits large enough to offset its costs. Strategic benefits (e.g., reliability, load diversity, fuel diversity, access to lower cost power plants, firm power purchase) were not analyzed in the study and could improve the projects' economic outlook (California Energy Commission, 2004a).

2.3 ECONOMIC AND STRATEGIC BENEFITS

It is not within the scope of this paper to determine the specific economic and strategic benefits of the TE/VS transmission line; however, these benefits need to be determined in light of policy recommendations as contained in the 2004 California Energy Commission's Integrated Energy Policy Report (California Energy Commission, 2004b). Improvements in the assessment of transmission costs and benefits include the ability to:

- Capture the long useful lives of transmission assets, which remain in service for 30 to 50 years or more,
- Explore various methods that quantitatively and qualitatively capture long-term strategic benefits, and
- Use an appropriate social discount rate to assess costs and benefits of transmission investments.

2.3.1 Transmission Assets Have Long Economic Lives

Transmission projects have very long economic lives, staying in service for 30 to 50 years and sometimes longer. The timeframe for evaluating the costs and benefits associated with transmission investments must be longer than the 10 years currently used in determining the need for transmission projects. Although a 10-year timeframe may seem an improvement over the 5-year horizon used to disapprove the Valley-Rainbow transmssion line, it remains seriously inadequate to properly evaluate such long-lived public assets.

2.3.2 Strategic Benefits

Transmission planners now recognize that many existing bulk transmission projects provide strategic benefits that were not foreseen or were not evaluated either quantitatively or qualitatively in the planning and permitting processes. Some of these benefits include insurance against contingencies during abnormal system conditions, price stability and mitigation of marketer power, the potential for increased reserve resource sharing, environmental benefits, reduction in generation infrastructure needs, and achievement of state energy policy objectives in commercializing renewable resources. The transmission interconnections to the Pacific Northwest and the Desert Southwest during the past 30 years have provided benefits well in excess of their costs. Many of these benefits were not calculated as part of these projects' economic evaluation when the projects were approved because they are difficult to measure and monetize. It is important to develop appropriate methodologies for quantifying as many of these strategic benefits as possible.

Although some of the strategic benefits of projects cannot be easily quantified, there are qualitative aspects that should be recognized and presented to decision makers, who can use this information to make fully informed decisions about the expected present and future value of transmission projects. In the future, all strategic benefits (qualitative and quantitative) of transmission projects must be fully included when evaluating proposed projects so that decision makers may accurately weigh a project's costs and benefits.

2.3.3 Social Discount Rate

The Energy Commission believes using a social discount rate is an appropriate approach for valuing the long useful life and the public good nature of transmission

projects. The costs and benefits of transmission lines under the restructured market are no longer limited to a sponsoring utility or its retail customers, as they were when utilities were vertically integrated. On the CA ISO grid, the costs of transmission upgrades are now spread among all users through transmission access charges. The benefits of these transmission investments cannot be denied to any retail customer or generation owner, and as a result, transmission lines have increasingly become a public good.

However, the current discount rate used to evaluate transmission projects at the CA ISO and CPUC is based on the utility industry's opportunity costs of capital, which effectively shortens the period over which benefits accrue. Decision makers must weigh the costs and benefits to society over the full useful life of these capital-intensive projects. Doing otherwise biases the decision against investment.

It should be noted that The Utility Reform Network (TURN) believes that the strategic benefits cited do not use a social discount rate. Furthermore, TURN states that it is preferable to incorporate the strategic benefit factors into the benefit/cost methodology, rather than change the discount rate. It is TURN's position that the ISO has already undertaken an extensive estimate of market power mitigation in its proposed Transmission Economic Assessment Methodology (TEAM) method (Schilberg and Florio, 2004) and that using a social discount rate to incorporate this benefit would mean double-counting of this factor.

2.3.4 Distributional Effects of Transmission Benefit Measurement

The benefits of a transmission expansion can accrue to both suppliers and consumers and can involve significant welfare transfers between these groups or between locations. Therefore, it is important to measure producer and consumer benefits on a regional basis and to understand how the welfare of these groups shifts under a transmission expansion. For example, a transmission expansion that has a significant impact on reducing market power will, for the most part, simply shift cost savings from producers to consumers. A conventional social welfare objective in which producer and consumer welfare are given equal weights would show very little net benefit because such a criterion does not consider the distribution effects. It only measures the net effect. However, public policy makers generally do care about distributional effects and therefore benefit measures that reflect the distributional effects are essential to the methodology.

A CAISO document sets out the principles of cost benefit analysis and provides three benefit measures for policy makers to consider in evaluating a transmission expansion: (1) an approach that gives equal weight to both consumer and producer surplus (i.e., the conventional social welfare objective), (2) an approach that gives equal weight to consumer benefits and the competitive portion of producer benefits (i.e., ignores any benefits that accrue to suppliers from market power), and (3) an approach that only looks at benefits to consumers. Since different decision makers can take different views of the merits of these measures, the most useful output from the

transmission valuation methodology will be the building blocks necessary to evaluate the given transmission investment project under all three different objective functions (CAISO and LE, 2003).

This page intentionally left blank.

3.0 CONCLUSIONS

It is crucial that potential transmission projects are identified as early as possible, evaluated, and, if feasible, expedited through the permitting process as quickly as possible before the opportunity for corridor acquisition is lost or becomes prohibitively expensive due to the rapid population grow. The construction of the TE/VS transmission line raises three important questions:

3.1 WHY BUILD THE TE/VS TRANSMISSION LINE INTERCONNECTION AT 500 kV INSTEAD OF 230 KV?

SDGE's 2003 Grid Planning Assessment proposed several new 230-kV projects to allow them the import of additional power in a cost-effective, reliable manner. It was stated in this report that all practical 230-kV alternatives had been exhausted and the ability to efficiently expand SDGE's import capability through internal system upgrades would require many lower voltage "band-aid" type upgrades in 2004 and beyond, which are not efficient or cost-effective, or would require load shedding contrary to the CA ISO grid planning criteria and standards. Since no 230-kV source exists at SCE's Valley substation, a 230-kV option would require construction of a 500/230-kV substation at or near Valley or connection to SCE's Mira Loma or Dever's 230-kV substation at costs similar to those determined for the Mira Loma and Dever's 500-kV options. To integrate with its long-term expansion needs, SDGE would still have to build the line using 500-kV design, and initially operate it at 230 kV. A 230-kV plan would also result in significantly greater reactive power requirements and increased system losses.

3.2 IS THE TRANSMISSION LINE NEEDED IN BOTH DIRECTIONS?

The LEAPS Project would only require that the transmission line be constructed only in one direction, i.e. either north to SCE's system or south to SDGE's system. In review of testimony and report findings, it is apparent that (1) SCE is not in favor of a 500-kV interconnection to its Valley substation (Schmus, undated); and (2) SDGE needs additional in-area generation resources. Therefore, the southern route is the indicated choice. However, the maximum benefit to both the CAISO and SDGE would be derived from completing the total connection between the TE and VS transmission lines. The second connection would also add the benefits listed above (i.e., reliability, reduced congestion, improved access).

3.3 WHY WOULD THE CPUC APPROVE THE TE/VS TRANSMISSION LINE WHEN IT DENIED THE RVI LINE THREE TIMES?

The TE/VS line has two primary advantages over the previously proposed RVI line: (1) it has 500 MW of new generation to offer SDGE; (2) it is being proposed for construction in a later time frame when estimated loads are higher, transmission constraint issues are greater and in-area generation resources are more known to be

limited and therefore likely to have greater economic benefit, especially if a 10- to 30-year economic life and the line's strategic benefits are considered

3.4 SUMMARY

San Diego has about 2,300 MW of local or in-basin generation and a peak load of about 4,500 MW. It must rely on imports from outside the San Diego area to meet the major portion of its peaking requirements. SDGE requested and has received bids for roughly 3000-MW of potential projects from outside their service area starting in 2005. These import requirements are currently being met by Path 44 with a rating of 2,500 MW and the Southwest Power Link with a rating of 1 120 MW. The loss of either of these two paths and their largest in-basin generator (G-1/N-1) jeopardizes the SDGE system reliability.

It appears that the TE/VS transmission line interconnection between the SCE and SDGE transmission systems could be an appropriate long-term solution to Southern California's transmission congestion bottlenecks as well as the transmission-constrained, generation-deficient San Diego area. The transmission line could provide 1,000 MW of import capability into the San Diego area with up to 500 MW of this import power being supplied by the LEAPS Project during high-demand periods. Combined with SDGE's proposed Imperial Valley to San Diego 500-kV Expansion Plan Project, the two lines would provide a total of 3,600 MW that could be imported into the San Diego area.

To further support our analysis of transmission issues, we have requested additional information. During the course of our NEPA document process, staff will monitor developments and planning of transmission issues affecting this project.

4.0 REFERENCES

Aspen Environmental Group. 2004. Comparative study of transmission alternatives background report web page. http://www.energy.ca.gov/reports/2004-06-08_700-04-006.PDF, accessed August 31, 2004. Prepared the California Energy Commission. Aspen Environmental Group, San Francisco, CA.

CAISO (California Independent System Operator). 2004. Reliability must-run ("RMR") study methodology: California ISO Grid Planning web page. http://www.caiso.com/docs/2004/05/20/2004052011155626868.pdf, accessed August 31, 2004. California Independent System Operator. February 24, 2004.

CAISO and LE (California Independent System Operator and London Economics International LLC). 2003. A proposed methodology for evaluating the economic benefits of transmission expansions in a restructured wholesale electricity market web page. http://www.caiso.com/docs/2003/03/25/2003032514285219307.pdf, accessed August 31, 2004. California ISO and London Economics International LLC. February 28, 2003

California Energy Commission. 2004a. Upgrading California's electric transmission system: issues and actions for 2004 and beyond web page. http://www.energy.ca.gov/2004_policy_update/documents/2004-08-23_workshop/2004-07-30_100-04-004D.PDF, accessed August 31, 2004. California Energy Commission, Sacramento, CA. July 2004.

California Energy Commission. 2004b. Integrated energy policy report: 2004 update web page. http://www.energy.ca.gov/2004_policy_update/documents/2004-10-20_100-04-006CTF.PDF, accessed November 8, 2004. California Energy Commission, Sacramento, CA. October 2004

CPUC (California Public Utilities Commission). 2004. CPUC' SDGE Valley-Rainbow 500-kV Interconnect Project web page. www.cpuc.ca.gov/environment/info/dudek/valleyrainbow/valleyrainbow.htm, accessed September 2, 2004. California Public Utilities Commission.

EPG and CERTS (Electric Power Group, LLC, and Consortium for Electric Reliability Technology Solutions). 2003. Planning for California's future transmission grid: Review of transmission system, strategic benefits, planning issues, and policy recommendations. Prepared for California Energy Commission. Electric Power Group, LLC, Pasadena, CA, and Consortium for Electric Reliability Technology Solutions, Berkeley, CA. October 2003.

Korinek, D. 2003. Direct testimony of David Korinek, San Diego Gas & Electric Company, before the Public Utilities Commission of the State of California web page. http://www.sdge.com/news/korinek.pdf, accessed August 31, 2004. San Diego Gas & Electric Company. April 15, 2003.

Kyei, J. 2004. Comparative reliability evaluation for alternative new 500-Kv transmission lines into San Diego web page. http://www1.caiso.com/docs/2004/05/17/2004051710385016456.pdf, accessed August 31, 2004. Grid Planning Department, California Independent System Operator. May 17, 2004.

Schilberg, G.M. and M.P. Florio. 2004. Comments of The Utility Reform Network on draft staff white paper on transmission issues in the matter of 2004 Intergrated Energy Policy Report Update, Docket #03-IEPR-1. http://www.energy.ca.gov/2004_policy_update/documents/2004-08-23_workshop/public_comments/SCHILBERG_FLORIO_2004-08-23.PDF, accessed November 8, 2004. State of California, State Energy Resources Conservation and Development Commission. September 2, 2004.

Schmus, W. Undated. Testimony of Wayne Schmus regarding SDGE's reliability justification for the project. Wayne Schmus, Pasadena, CA.

Sierra Energy & Risk Assessment, Inc. 2002. Assessment of the Valley-Rainbow Transmission Project. Prepared for Office of Ratepayer Advocates, California Public Utilities Commission. Sierra Energy & Risk Assessment, Inc.

Woodruff Expert Services. 2004. Prepared direct testimony of Kevin Woodruff on behalf of the Utility Reform Network and the Utility Consumer Action Network regarding the October 7 motion of San Diego Gas & Electric for approval of certain resource acquisitions before the Public Utilities Commission of the State of California. Woodruff Expert Services, Sacramento, CA.

ATTACHMENT 1

HISTORY OF VALLEY-RAINBOW PROJECT

In 2000 and early 20001, SDGE began to have serious difficulty providing power to its clients on a reliable and consistent basis. During this period, outages occurred frequently and electricity prices increased because of inadequate electricity supply, changes in the operation of electricity markets, and other market power problems. As a result, programs were implemented to help stimulate conservation, and electricity demand dropped significantly through early 2002. Since then, electricity prices have moderated, and power demand has started to rebound and is expected to continue to increase in coming years. Although reliability and price problems have not reoccurred recently, both the CAISO and SDGE anticipate future problems with providing electricity unless the physical system is modified and market-related issues are addressed.

SDGE and the CAISO proposed the Valley Rainbow Project to reliably deliver electricity to the San Diego area in the future and to mitigate a CAISO reliability criteria violation that requires the CAISO to drop customer load. The Valley Rainbow Project would have connected SDGE's existing 230-kV transmission system at a new Rainbow substation in northern San Diego County with SCE's existing 500-kV transmission system at the Valley substation in western Riverside County.

In March 2001, SDGE filed an application with the CPUC for a CPCN for the Valley Rainbow Project, and in December 2002, the project was denied without prejudice as not needed for reliability purposes (CPUC Decision 02-12-066). On January 23, 2003, SDGE filed two petitions: an Application for Rehearing of San Diego Gas & Electric Company Decision of 02-12-066 and a Petition to Modify Decision of 02-12-066. On May 12, 2003, the CPUC issued a decision denying rehearing of the Valley Rainbow decision and on June 5, 2003, the CPUC issued a decision denying the Petition to Modify the Decision.

SDGE is currently in the process of studying multiple alternatives to the original proposal, including two alternatives being considered in the STEP process. The TE/VS 500-kV Transmission Line is one of those projects. The ISEP is the other (Aspen Environmental Group, 2004).

The same transmission corridor through the National Forest (intended to facilitate construction of the Valley Rainbow Project shown as the Trabuco District Alternative figure 3-4 of the application) could be used for the LEAPS Project. Currently, the licensing process underway deals with both the hydroelectric plant and the transmission lines that would be used to connect that plant to the electric grid. There has been discussion at the EVMWD Board and at CAISO of having this transmission route be a substitute for the originally proposed Valley Rainbow Project (Korinek, 2003).

References

Aspen Environmental Group. 2004. Comparative study of transmission alternatives background report web page. http://www.energy.ca.gov/reports/2004-06-08_700-04-006.PDF, accessed August 31, 2004. Prepared the California Energy Commission. Aspen Environmental Group, San Francisco, CA.

Korinek, D. 2003. Direct testimony of David Korinek, San Diego Gas & Electric Company, before the Public Utilities Commission of the State of California web page. http://www.sdge.com/news/korinek.pdf, accessed August 31, 2004. San Diego Gas & Electric Company. April 15, 2003.