2.0 DESCRIPTION OF THE PROPOSED ACTION

2.1 PROPOSED FACILITIES

Dominion proposes to expand its existing Cove Point LNG Terminal by adding two new 160,000-cubic meter (m^3) LNG storage tanks and additional vaporization capacity. The proposed terminal expansion would increase the sendout capability by 800,000 dekatherms per day (Dth/d) and increase the storage capacity by 6.8 million dekatherms per day (MMDth/d). Dominion also proposes to construct and operate about 47.8 miles of 36-inch-diameter loop pipeline in Calvert, Prince George's, and Charles Counties, Maryland to allow it to deliver an additional 800,000 Dth/d from its LNG terminal to its connections with other interstate pipelines.

Dominion also proposes to construct and operate about 81 miles of 24-inch-diameter pipeline lateral in central Pennsylvania and 33 miles of pipeline in other parts of Pennsylvania and West Virginia. As part of the new central Pennsylvania system, Dominion proposes to construct two new compressor stations in Juniata and Centre Counties, Pennsylvania. Finally, Dominion proposes new and modified facilities to reinforce its existing natural gas transmission and storage system. These facilities would consist of about 33 miles of 20- and 24-inch-diameter pipeline in three segments in Potter and Green Counties, Pennsylvania and Wetzel County, West Virginia; miscellaneous piping changes and other minor facility modifications at existing compressor and M&R stations in Virginia, West Virginia, Pennsylvania, and New York; and an increase in the MAOP of existing facilities in Pennsylvania and Virginia.

Proposed aboveground facilities are listed in table 2.1-1. Proposed pipeline facilities are listed in table 2.1.2-1. A general project location map is provided as figure 2.1-1. The following section describes the proposed LNG terminal expansion and pipeline facilities, land requirements, construction procedures and schedule, environmental compliance and inspection monitoring, operation and maintenance procedures, and safety controls.

TABLE 2.1-1

Cove Point Expansion Project
Proposed LNG Terminal Expansion and Other Aboveground Facilities

Facility	County	State	New/Added Compression (hp)	Comment
Cove Point LNG Terminal Expansion	Calvert	MD	-	Two LNG storage tanks, vaporization equipment, electric generation, and associated infrastructure
Loudoun M&R Station Upgrade	Loudoun	VA	-	Existing station
Perulack Compressor Station	Juniata	PA	4,735	New station
Centre Relay Compressor Station	Centre	PA	10,800	New station
Mockingbird Hill Compressor Station Upgrade	Wetzel	WV	2,800	Existing station
Leesburg Compressor Station Modification	Loudoun	VA	-	Existing station
Chambersburg Compressor Station Mod.	Franklin	PA	-	Existing station
Leidy M&R Station Upgrade	Clinton	PA	-	Existing station
Wolf Run Compressor Station Expansion	Lewis	WV	3,550	Compressor station has been approved by FERC in prior project but is not yet constructed
Quinlan Compressor Station Upgrade	Cattaraugus	NY	-	Compressor station has been approved by FERC in prior project but is not yet constructed

TABLE 2.1-1 (Continued) Cove Point Expansion Project Proposed LNG Terminal Expansion and Other Aboveground Facilities				
Facility	**County**	**State**	**New/Added Compression (hp)**	**Comment**
Gate Valve and Pig Receiver - TL-492 EXT3 Pipeline	Greene	PA	-	MP 10.7 on TL-492 EXT3 Pipeline
Pig Launcher/Receiver - TL-536 Pipeline	Potter	PA	-	Within existing compressor station at MP 0.0
Pig Launcher - TL-453 EXT1 Pipeline	Potter	PA		Removed from Harrison Station (MP 11.5) and re-installed at Ellisburg Station (MP 0.0)
Gate Valve - TL-453 EXT1 Pipeline	Potter	PA	-	As yet undetermined location

2.1.1 LNG Terminal Expansion

Dominion proposes to add the following equipment to its existing Cove Point LNG Terminal. A general plot plan of the proposed expansion facilities is included in figure 2.1-2.

LNG Storage Tanks

Dominion proposes to increase the LNG storage capacity of the Cove Point LNG Terminal by the addition of two 160,000 m^3, single containment, double-wall metal LNG storage tanks. The tanks would be constructed of a 9 percent nickel steel inner tank, a carbon steel outer tank, and an aluminum suspended insulation support deck. The outer tanks would be about 271 feet in diameter and 161 feet high.

LNG Vaporization and Sendout

In association with the additional LNG storage, Dominion would install facilities to vaporize and handle the LNG and associated boil-off gas (BOG), and allow for the sendout of the vaporized LNG (natural gas). Proposed LNG vaporization and sendout facilities include:

- four vertical shell and tube vaporizers;
- two waste heat shell and tube vaporizers;
- four second-stage sendout pumps;
- three low pressure LNG tank withdrawal pumps;
- one BOG compressor;
- five non-cryogenic rotary screw BOG compressors;
- seven water/ethylene glycol heaters;
- five hot water/ethylene glycol circulation pumps;
- four warm water/ethylene glycol circulation pumps;
- one vent heater;
- two waste heat recovery units;
- two instrument air compressors; and
- other related facilities and buildings.

Non-Internet Public

DRAFT ENVIRONMENTAL IMPACT STATEMENT
FOR THE PROPOSED
COVE POINT EXPANSION PROJECT

Docket Nos. PF04-15-000, and CP05-130-000 et al.

Page 2-3

Figure 2.1-1
General Facilities Location Map

Public access for the above information is available only through the Public Reference Room, or by e-mail at public.referenceroom@ferc.gov.

Non-Internet Public

DRAFT ENVIRONMENTAL IMPACT STATEMENT
FOR THE PROPOSED
COVE POINT EXPANSION PROJECT

Docket Nos. PF04-15-000, and CP05-130-000 et al.

Page 2-4
Figure 2.1-2
General Plot Plan of Proposed
Cove Point LNG Terminal Expansion Facilities

Public access for the above information is available only through the Public Reference Room, or by e-mail at public.referenceroom@ferc.gov.

Power Generation

Dominion proposes to install additional power generation to provide electricity for motor-driven equipment, lighting controls, and other ancillary facilities. Proposed equipment includes two 21.7 megawatt gas turbine generators and three emergency generators.

Associated Infrastructure

The proposed expansion facilities would require installation of new access roads within the terminal facility. Construction of the expansion facilities would also require temporary work areas, staging areas, and construction parking.

Use of Offshore Berths

In FERC Docket No. CP01-76-000, Cove Point LNG, L.P. requested FERC authorization to reactive the Cove Point LNG facility as a marine import terminal. Included in that request was use of the two existing berths (piers or offshore loading facility), known as the north and south berths. Prior to the Commission approval in 2001, a bathymetric study was conducted at both berths to determine if dredging was necessary due to sedimentation, since the berths had not been used since approximately 1980. The study concluded that the approaches to the berths and channel area were shown to be sufficiently deep for unlimited access and passage of ships serving the terminal. However, the surveys indicated that the south berth was silted, with an average elevation in the mud bottom of about -37 feet and high points at -34.2 feet. Based on the bathymetric survey, FERC environmental staff concluded that sufficient depth did not exist at the south berth to dock all classes of LNG tankers.

Therefore, to minimize disturbance of bottom sediments and to avoid the need to dredge, the Commission Order authorized the reactivation and refurbishment of **both** the north and south berths, but conditioned the use of the south berth. Environmental condition number 10 of the Order stated that, unless authorized by the Coast Guard, docking/unloading at the south berth should be limited to ships with drafts that provide a minimum under-keel clearance of 2 feet during all tide conditions.

Subsequently, the Coast Guard's LOR, issued December 23, 2002, stated that the south berth was not currently suitable for LNG marine traffic unless the water depth was increased by dredging. However, the water in the vicinity of the north berth was deemed to be sufficiently deep for the safe maneuvering of LNG vessels. Currently, Dominion is using only the north berth for LNG tanker delivery.

Dominion does not propose to dredge, or otherwise modify the north or south berth as part of the current expansion Project. However, pursuant to the proposed expansion, Dominion filed another Letter of Intent to the Commanding Officer, Baltimore Sector, Coast Guard, on April 14, 2005. Dominion anticipates an increase in LNG vessel traffic, with a projection of receiving one ship every other day at the terminal by year 2009.

2.1.1.1 LNG Ships

The ships that transport LNG are specially designed and constructed to carry LNG for long distances. LNG ship construction is highly regulated and combines conventional ship design and equipment with specialized materials and systems designed to safely contain liquids stored at temperatures of -260°F.

The following sections present a brief overview of the main design and safety features of a typical LNG ship that transports LNG to the Cove Point LNG terminal.

Profile

LNG ships have a distinctive appearance compared with other transport ships. A LNG ship has a high freeboard (*i.e.*, that portion of the ship above water), when compared with vessels such as an oil tanker, because of the comparatively low density of the cargo. Because of the high freeboard, wind velocity can adversely affect the maneuverability of the ship, particularly at slow speed, such as during docking.

Hull System

All LNG ships are constructed with double hulls while most other liquid transport ships presently in use have single-hull construction. Double-hull construction increases the structural integrity of the hull system and provides protection for the cargo tanks in case of an accident. The space between the inner and outer hulls is used for water ballast. The International Code for the Construction and Equipment of Ships Carrying Liquefied Gases in Bulk (Gas Tanker Code) and Coast Guard regulations require that LNG ships meet a Type IIG standard of subdivision, damage stability, and cargo tank location.

The Type IIG standard requires that the LNG ship design withstand flooding of any two adjacent compartments without any adverse effect upon the stability of the ship. Type IIG design also requires that the cargo tanks must be a minimum of 30 inches from the outer hull and a minimum distance above the bottom of the ship equal to the beam of the ship divided by 15, or 6.5 feet, whichever is less. This distance is intended to prevent damage to the cargo tanks in case of low energy-type accidents that might occur in harbors and during docking. Most large LNG ships have a distance of 10 to 15 feet between the outer hull and cargo tank.

Containment Systems

The LNG containment system on the LNG ships consists principally of the cargo tank (sometimes called a primary barrier), the secondary barrier, and insulation. The containment system also includes cargo monitoring and control and safety systems.

Three basic tank designs have been developed for LNG cargo containment: prismatic free standing, spherical, and membrane. The earliest form of LNG containment is the prismatic free-standing tank. It consists of an aluminum alloy or 9 percent nickel steel, self-supporting tank that is supported and restrained by the hull structure. Insulation consists of reinforced polyurethane foam on the bottom and the sides, with fiberglass on the top. The spherical tank design uses an unstiffened, spherical, aluminum alloy tank that is supported at its equator by a vertical cylindrical skirt with the bottom of the skirt integrally welded to the ship's structure.

This free-standing tank is insulated with multi-layer close-cell polyurethane panels. In the membrane containment system, the ship's hull constitutes the outer tank wall with an inner tank membrane separated from it by insulation. Two forms of membrane are commonly used: the Technigaz membrane using stainless steel and the Gas-Transport membrane using Invar.

LNG tankers are of the double-hulled design regardless of the containment system used. A double bottom and double sides are provided for the full length of the cargo area and arranged as ballast tanks, independent of the cargo tanks. The double-hulled design provides greatly increased reliability of cargo containment in the event of grounding and collisions. Further, the segregated ballast tanks prevent ballast water from mixing with any residue in the cargo tanks.

Pressure/Temperature Control

A basic goal of all LNG containment systems is to maintain the LNG cargo at or near atmospheric pressure at the boiling temperature of the LNG (about -260°F). This is accomplished using "auto refrigeration," a phenomenon that results from the constant heat flow into the tank and the removal of the associated vapor.

The vapor generated ranges from 0.15 to 0.25 percent (by volume) per day and is used to supplement the bunker fuel in the ship's boilers. Currently, all LNG ships burn the boil off as fuel. As a result, LNG ships have reduced emissions of air pollutants when compared with conventional oil-fired ships. LNG cargo tanks remain under a gas atmosphere to prevent contact with oxygen.

Ballast Tanks

Sufficient ballast water capacity must be provided to permit the ship to return to the loading port safely under various sea conditions. LNG cargo tanks are not used as ballast tanks because these tanks must contain a minimal amount of LNG to remain at cryogenic temperatures. Consequently, LNG ships must be designed to provide adequate ballast capacity in other locations.

Ballast water tanks are arranged within the LNG ship's double hull. Since it is essential that ballast water not leak into the LNG containment system, the ballast tanks, cofferdams, and void spaces are typically coated to reduce corrosion and the potential for leakage. LNG ships also are periodically inspected to examine the coating and to renew it as necessary.

A ballast control system, which permits simultaneous ballasting during cargo transfer operations, also is incorporated into each LNG ship. This allows the LNG ship to maintain a constant draft during all phases of its operation to enhance performance. Under normal operating conditions, ballast water would be taken onto the ship during LNG offloading at the LNG terminal. A typical LNG ship would take on up to 14 million gallons of ballast water during offloading operations. The ballast water would be pumped at a maximum rate of about 16,000 gpm and an average rate of about 12,000 gpm over a 12- to 16-hour period. The intake aperture on the ships would be about 25 to 30 feet below the water surface. Ballast water would not be discharged to the Chesapeake Bay during unloading operations.

Ship Safety Systems

LNG vessels calling on the Cove Point LNG Terminal would have to comply with all federal and international standards regarding LNG shipping. As such, ships would be fitted with an array of cargo monitoring and control systems. These systems would automatically monitor key cargo parameters while the ship is at sea and during the remote control phase of cargo operations at the marine terminal basin. The system includes provisions for pressure monitoring and control, temperature monitoring of the cargo tanks and surrounding ballast tanks, emergency shutdown of cargo pumps and closing of critical valves, monitoring of tank cargo levels, and gas and fire detection.

The LNG ships also would be fitted with many navigation and communication systems, including:

- two separate marine radar systems, including automatic radar plotting and radio direction finders;
- LORAN-C receivers;
- echo depth finders; and
- a satellite navigation system.

All LNG ships also have redundant, independent steering control systems that are operable from the bridge or steering gear room to maintain rudder movement in case of a steering system failure.

Fire Protection

All LNG ships arriving at the Cove Point LNG Terminal would be constructed according to structural fire protection standards contained in the International Convention for the Safety of Life at Sea (SOLAS). This would be done under the review and approval of the Coast Guard.

The ships also would be fitted with active fire protection systems that meet or exceed design parameters in Coast Guard regulations and international standards, such as the Gas Tanker Code and SOLAS, including:

- a water spray (deluge) system that covers the accommodation house and central room, and all main cargo control valves;
- a traditional firewater system that provides water to fire monitors on deck and to fire stations found throughout the ship;
- a dry powder fire extinguishing system for LNG fires; and
- a carbon dioxide (CO_2) system for protecting the machinery, ballast pump room, emergency generators, cargo compressors, etc.

Crew Qualifications and Training

All officers and crews of the LNG ships would comply with the International Convention Standards of Training, Certification and Watch Keeping for Seafarers. Key members of the crew must have specific training in the handling of LNG and the use of the safety equipment. Officers must receive simulator training in the handling of the ship and the cargo systems specific to the

conditions at the Project site. In addition, a local pilot from the port would board each ship and guide it through the Chesapeake Bay.

Ship Selection

The specific identity of LNG ships that would offload at the Cove Point LNG Terminal would depend on the commercial terms of the LNG purchase agreements. Transportation could be provided by either the LNG buyer or supplier. The different contractual arrangements for LNG transport can result in ships of different sizes and countries of origin being used to transport LNG to the Cove Point LNG Terminal.

Table 2.1.1-1 shows the relative dimensions of the 125,000 m^3 to 145,000 m^3 ships typical of those presently in service; and the dimensions of future ships ranging from 165,000 m^3 to 250,000 m^3.

TABLE 2.1.1-1

Typical LNG Ship Characteristics

Specifications	Existing Ships		Future Ships		
Capacity (m^3)	125,000	145,000	165,000	200,000	250,000
Length Overall (feet)	936 - 950	905 - 936	982	1,033	1,128
Beam (feet)	135 - 145	142 - 158	151	164	177
Draft (feet)	35 - 36	37 - 38	38	39	39

Ships arriving at the Cove Point LNG Terminal would comply with the Coast Guard regulations for LNG ships. This compliance is demonstrated by the operator of the LNG ship having proper certificates authorizing the transport of LNG as follows:

- U.S. Flag LNG Ship – The Coast Guard Certificate of Inspection must be valid and endorsed for the ship to transport LNG (46 CFR 154, 1979).[3]
- Foreign Flag LNG Ship – The ship must have a valid Certificate of Compliance (COC) issued by the Coast Guard. The certificate is issued after the ship has proved that it complies with the Coast Guard regulations and after it has been inspected satisfactorily by a Coast Guard Marine Safety Officer (46 CFR 154, 1979).

Both U.S. and foreign flag ships must be inspected annually by the Coast Guard and the flag country. A Coast Guard Certificate of Inspection is required every 2 years. Coast Guard officers may board the LNG ships arriving in the Chesapeake Bay to ensure safety standards are met. Dominion would continually monitor ship operations to ensure that operations are in accordance with its established procedures and that ships are maintained to all standards.

2.1.2 Pipeline Facilities

Dominion proposes to construct approximately 161 miles of new buried, welded high tensile steel natural gas pipeline, consisting of five separate facilities in three states. Dominion also proposes to replace or retest another 1.0 mile of existing pipeline. Proposed pipeline facilities

[3] At this time there are no U.S. Flag LNG Ships.

included in the Cove Point Expansion Project are listed in table 2.1.2-1, shown on pipeline route maps included in appendix B, and described below.

TABLE 2.1.2-1

Cove Point Expansion Project Proposed Pipeline Facilities

Facility	Diameter (inches)	Length (mi)	Mileposts	County	State
TL-532 Pipeline	36	22.3	S1MP0.0 – 22.3	Calvert	MD
		3.7	S1MP22.3 – S2MP1.3	Prince George's	MD
		18.5	S2MP1.3 – 19.8	Charles	MD
		3.0	S2MP19.8 – 22.8	Prince George's	MD
		0.3	S2MP22.8 – 23.1	Charles	MD
		47.8			
PL-1 EXT2 Pipeline	24 a/	8.1	S1MP10.0 – 8.1	Juniata	PA
		15.4	S1MP8.1 – 23.8	Mifflin	PA
		4.5	S1MP23.8 – S2MP1.5	Huntingdon	PA
		34.0	S2MP1.5 – S3MP6.9	Centre	PA
		18.7	S3MP6.9 – 25.5	Clinton	PA
		80.7			
TL-492 EXT3 Pipeline	24	0.3	0.0 – 0.3	Wetzel	WV
		10.4	0.3 – 10.7	Greene	PA
		10.7			
TL-453 EXT1 Pipeline	24	11.5	0.0 – 11.5	Potter	PA
TL-536 Pipeline	20	9.5	0.0 – 9.5	Potter	PA
PL-1 Pressure Restoration Sites	30	0.6		Franklin	PA
	30	0.4		Franklin	PA
		1.0			
Total Pipeline Length		**161.2**			

a/ The first 0.25 mile of the PL-1 EXT2 Pipeline would be 30-inch-diameter.
b/ Construction of the PL-1 EXT2 Pipeline would also include construction of 0.25-mile of 16-inch-diameter pipeline (PL-5 Pipeline) installed within the same right-of-way as the first 0.25 mile of the PL-1 EXT2 Pipeline.

TL-532 Pipeline

The TL-532 pipeline would consist of 47.8 miles of 36-inch-diameter pipeline starting at the existing Cove Point LNG Terminal in Lusby, Calvert County, Maryland, and ending at a tie-in to the existing Marshall Hall Gate site in Marshall Hall, Prince George's County, Maryland. Approximately 36 miles of the proposed route (75 percent) would be adjacent to Dominion's existing TL-522 pipeline. The TL-532 pipeline would transport additional volumes of natural gas made possible by the proposed expansion of the Cove Point LNG Terminal.

PL-1 EXT2 Pipeline

The PL-1 EXT2 Pipeline would consist of 80.7 miles of 24-inch-diameter pipeline starting at Dominion's existing PL-1 Pipeline near Perulack, in Juniata County, Pennsylvania, and ending at Dominion's existing Leidy Hub Station in Clinton County, Pennsylvania. Approximately 75 miles of the proposed route (93 percent) would be adjacent to an existing Texas Eastern Pipeline. The PL-1 EXT2 Pipeline would move natural gas from the proposed new Perulack Compressor Station in Juniata County to Dominion's South Point Market Center, other interstate pipelines, Dominion's existing pipeline system, and the Leidy Hub.

Construction of the PL-1 EXT2 Pipeline would also include construction of the 0.25-mile, 16-inch-diameter PL-5 Pipeline which would be installed within the same right-of-way as the PL-1 EXT2 Pipeline between S1MPs 0.0 and 0.25. The PL-5 Pipeline would connect Dominion's proposed Perulack Compressor Station with an existing Texas Eastern pipeline. Because this minor pipeline facility would be within the same right-of-way as the PL-1 EXT2 Pipeline, any impacts associated with the PL-5 Pipeline would overlap those of the PL-1 EXT2 Pipeline. Therefore, our analysis of the PL-1 EXT2 Pipeline in this EIS also addresses the PL-5 Pipeline, and no further analysis specific to the PL-5 Pipeline is included in this EIS.

TL-492 EXT3 Pipeline

The TL-492 EXT3 Pipeline would consist of 10.7 miles of 24-inch-diameter pipeline starting at Dominion's existing TL-492 Pipeline near Lambert Junction, Wetzel County, West Virginia, and ending at a tie-in to Dominion's existing TL-342 Pipeline at Bluff Gate, Green County, Pennsylvania. The entire length would be adjacent to Dominion's existing TL-492 Pipeline. The TL-492 EXT3 Pipeline would expand Dominion's capacity for moving natural gas to and from its natural gas storage facilities.

TL-453 EXT1 Pipeline

The TL-453 EXT1 Pipeline would consist of 11.5 miles of 24-inch-diameter pipeline starting at Dominion's existing TL-453 Pipeline and Ellisburg Compressor Station near Ellisburg and end at Dominion's existing Harrison Compressor Station near Harrison, Potter County, Pennsylvania. Approximately 8.5 miles (74 percent) of the pipeline route would be adjacent to existing pipeline right-of-way. The TL-453 EXT1 Pipeline would expand Dominion's capacity for moving natural gas to and from its natural gas storage facilities. As part of the Project, Dominion would also make minor modifications to the TL-453 Pipeline for overpressure protection at the Ellisburg and Harrison Compressor Stations, as well as at the Woodhull Compressor Station in Steuben County, New York.

TL-536 Pipeline

The TL-536 Pipeline would consist of 9.5 miles of 20-inch-diameter pipeline starting at Dominion's existing State Line Compressor Station in Genesee Township and end at an existing aboveground facility in Sharon Township, Potter County, Pennsylvania. The entire length would be adjacent to Dominion's existing L-257-S Pipeline. The TL-536 Pipeline would expand Dominion's capacity for moving natural gas to and from its natural gas storage facilities.

PL-1 Pipeline Pressure Restoration Sites

The PL-1 Pipeline Pressure Restoration Sites would consist of replacement of 0.6 mile of 30-inch-diameter pipeline in Franklin County, Pennsylvania. Replacement would include removal and abandonment of old pipeline and installation of new pipeline. Dominion also proposes to pressure test another 0.4 mile of 30-inch-diameter pipeline, and if the pressure test is unsuccessful would also replace this pipeline. The PL-1 Pipeline Pressure Restoration would upgrade Dominion's system to facilitate delivery of re-gasified LNG.

2.1.3 Other Aboveground Facilities

In addition to facilities at the Cove Point LNG Terminal, Dominion proposes to construct various other aboveground facilities as part of its Cove Point Expansion Project. Proposed aboveground facilities are listed in table 2.1-1, shown on maps included in appendix B, and described below.

Loudoun Measuring and Regulating (M&R) Station Upgrade

Dominion proposes to modify measuring equipment for the purposes of increasing flow capacity at its existing Loudoun M&R Station in Loudoun County, Virginia. These changes would consist of replacing existing measuring tubes with larger tubes, and all work required for the upgrade would be entirely within the existing station building.

Perulack Compressor Station

Dominion proposes to construct the new Perulack Compressor Station at the south end of the PL-1 EXT2 Pipeline in Juniata County, Pennsylvania. The compressor station would consist of one 4,735-hp gas-fired reciprocating engine/compressor unit.

Centre Relay Compressor Station

Dominion proposes to construct the new Centre Relay Compressor Station at S2MP 13.2 on the PL-1 EXT2 Pipeline in Centre County, Pennsylvania. The compressor station would consist of two gas-fired turbines totaling 12,500-hp compression.

Mockingbird Hill Compressor Station Upgrade

The existing Mockingbird Hill Compressor Station is located near Pine Grove in Wetzel County, West Virginia. Dominion proposes to upgrade the station by the addition of 2,800 hp of compression, which would be accomplished by replacing an existing 5,000-hp gas turbine engine with a 7,800-hp gas turbine engine. The upgrade would expand Dominion's capacity for moving natural gas to and from its natural gas storage facilities. The upgrade would occur within the existing compressor station yard.

Leesburg Compressor Station Modification

The existing Leesburg Compressor Station is located along the existing PL-1 Pipeline near Leesburg in Loudoun County, Virginia. Currently the compressor station pumps gas through the PL-1 Pipeline only from north to south. Dominion proposes to conduct piping changes at the Leesburg Station to allow bi-directional flow of natural gas. Piping changes would occur within the existing station yard.

Chambersburg Compressor Station Modification

The existing Chambersburg Compressor Station in located along the existing PL-1 Pipeline near Chambersburg in Franklin County, Pennsylvania. Currently the compressor station pumps gas through the PL-1 Pipeline only from north to south. Dominion proposes to conduct piping changes at the Chambersburg Station to allow bi-directional flow of natural gas. Piping changes would occur within the existing station yard.

Leidy M&R Station Upgrade

The existing Leidy M&R Station is located at the Leidy Hub complex in Clinton County, Pennsylvania. Dominion proposes to add additional measurement and regulation facilities at this station, as well as install a pig launcher/receiver at the end of the PL-1 EXT2 Pipeline, and replace approximately 0.1 mile of 16-diameter pipeline with 0.1 mile of 24-inch-diameter pipeline. The Leidy M&R Station Upgrade would allow for increased flow and measurement of the increased natural gas volume resulting from the Project. The upgrade facilities would be installed within and immediately adjacent to the existing M&R station.

Wolf Run Compressor Station Expansion

Dominion plans to construct the 3,500-hp Wolf Run Compressor Station, in Lewis County, West Virginia, as part of a previous project filed with the Commission (Northeast Storage Expansion Project, Docket No. CP04-365-000). The Commission approved the Northeast Storage Expansion Project on June 16, 2005. As part of the Cove Point Expansion Project, Dominion proposes to add another 3,550 hp to the Wolf Run Compressor Station. Facilities proposed in the Cove Point Expansion Project would be within the area previously studied for the Northeast Storage Expansion Project, but would require expansion of the compressor building to house the added compression units.

Quinlan Compressor Station Upgrade

Dominion plans to construct the 4,740-hp Quinlan Compressor Station, near Olean in Cattaraugus County, New York, as part of a previous project filed with the Commission (Northeast Storage Expansion Project, Docket No. CP04-365-000). The Commission approved the Northeast Storage Expansion Project on June 16, 2005. As part of the Cove Point Expansion Project, Dominion proposes to conduct ancillary equipment upgrades to increase gas dehydration and flow capabilities at the station. The equipment upgrades would be conducted within the area that would be disturbed by construction of the original compressor station.

Pig Launchers/Receivers and Gate Valves

Dominion would install pig launchers/receivers and gate valves at several locations along its proposed pipelines (see table 2.1-1). These aboveground facilities would be within the areas disturbed by pipeline construction and within existing compressor station facilities or within the permanent operational right-of-way for the various pipelines.

2.1.4 Proposed Facilities with Limited or No Further Review in This EIS

Several facilities proposed as part of the Cove Point Expansion Project would involve only minor modifications to existing facilities, with construction activity limited to existing buildings or within existing station yards. For these facilities, environmental impact of the proposed action would be consistent with ongoing operation of the facilities, and generally insignificant, therefore we have limited our analysis of these facilities in this EIS. However, for some facilities there has not been recent documented review for cultural resources for the entire area of potential disturbance for this Project, therefore, we have included cultural resources review for these facilities. Also, some of these facilities would include changes to equipment that could affect air emissions or noise, and we have included analysis of air quality and noise for these facilities. Table 2.1.4-1 lists those proposed facilities for which we have limited further environmental analysis in this EIS.

TABLE 2.1.4-1

Proposed Facilities With Limited Review in This EIS

Proposed Facility	Environmental Review Included in EIS		
	No Further Review	Cultural Resources	Air Quality and Noise
Loudoun M&R Station Upgrade	X		
Mockingbird Hill Compressor Station Upgrade		X	X
Leesburg Compressor Station Modification		X	
Chambersburg Compressor Station Modification		X	
Quinlan Compressor Station Upgrade			X
TL-453 Pipeline, Overpressure Protection within Woodhull Compressor Station		X	

2.2 LAND REQUIREMENTS

Land requirements for LNG and pipeline projects are typically measured in terms of construction impact and permanent impact. Construction impact includes the total area disturbed during the course of construction, and includes the construction site for aboveground facilities; pipeline construction right-of-way; extra temporary work spaces outside of, but adjacent to, the construction site or right-of-way (typically required for pipeline crossings of major highways, railroads, rivers, wider streams and wetlands, existing buried pipelines, and areas of side slope); temporary work spaces away from the right-of-way such as staging areas, pipe storage yards, and contractor yards; and new or improved access roads. Permanent impact includes land that would be required for operation and maintenance of new aboveground facilities and the new permanent right-of-way required for operation and maintenance of the pipelines.

Construction of the Cove Point Expansion Project would disturb a total of about 1,900 acres of land. Of this construction impact, 175 acres would be for aboveground facilities, and 1,725 acres would be pipeline construction. Following construction, Dominion would maintain about 59 acres for new aboveground facilities, and 1,078 acres of new permanent pipeline right-of-way. Land requirements for major project components are listed in table 2.2-1 and summarized below.

2.2.1 Cove Point LNG Terminal Expansion

Construction of the proposed LNG terminal expansion facilities would require 48.7 acres. Following construction, 30.6 acres would be required for operation of the new facilities. All of the land that would be affected by construction and operation is currently owned by Dominion.

TABLE 2.2-1

Land Requirements for Cove Point Expansion Project Proposed Facilities

Facility	Land Affected During Construction (acres)	Land Required for Operation (acres)
Aboveground Facilities		
Cove Point LNG Terminal Expansion	48.7	30.6
Perulack Compressor Station	25.4	11.6
Centre Relay Compressor Station	55.6	15.9
Mockingbird Hill Compressor Station Upgrade	4.8 a/	0
Leidy M&R Station Upgrade	10.2	0
Wolf Run Compressor Station Expansion	20.8 a/	----
Quinlan Compressor Station Upgrade	9.1 a/	0
Gate Valve and Pig Receiver	0.2	0.2
Gate Valve	0.2	0.2
Pig Launcher/Receiver	0.2	0.2
Pig Launcher	0.2	0.2
Subtotal	**175.4**	**58.9**
Pipeline Facilities b/		
TL-532 Pipeline	480.1	383.6
PL-1 EXT2 Pipeline	878.1	488.9
TL-492 EXT3 Pipeline	116.1	65.4
TL-453 EXT1 Pipeline	135.5	70.0
TL-536 Pipeline	102.7	70.6
PL-1 Pressure Restoration Sites	12.4	0
Subtotal	**1,724.9**	**1,078.5**
Project Total	**1,900.3**	**1,137.4**

a/ Includes total area within existing or previously approved facility site that could potentially be used for construction.
b/ Areas for construction of pipeline facilities include construction right-of-way, extra work space, pipeyards, and access roads.

2.2.2 Pipeline Facilities

Dominion proposes to use a typical construction right-of-way width of 75 feet for its pipelines, with some locations along the TL-532 pipeline being 70 feet. Extra workspace adjacent to the construction right-of-way would also be required at road, railroad, wetland, and river crossings. Temporary pipeyards, including construction contractor yards, would also be required in the general vicinity of most of the proposed pipelines. Approximately 140.7 miles, or 87 percent of the length of the proposed pipelines would be adjacent to existing rights-of-way. Where the pipelines would be adjacent to existing rights-of-way, a portion of the construction right-of-way would overlap the existing right-of-way, minimizing the width of new clearing or land impact required.

Following construction, Dominion would maintain 15-25 feet of new permanent right-of-way where its pipelines would be adjacent to existing pipeline right-of-way, and 50 feet of new permanent right-of-way where the pipelines would deviate from existing rights-of-way. Figures 2.2-1 through 2.2-3 show examples of Dominion's typical right-of-way cross sections.

Construction of the proposed pipeline and facilities would disturb about 1,725 acres, including construction rights-of-way, additional temporary workspaces, contractor and pipeyards, and construction access roads. Following construction, operation of the new pipeline facilities would require about 1,078 acres for new permanent pipeline easements. In addition, a small area of new or improved access roads would be left as access roads following construction. The remainder of the temporary pipeline construction right-of-way, extra workspace, and pipeyards would be restored to their previous condition and use.

2.2.3 Other Aboveground Facilities

The area required for construction and operation of aboveground facilities would depend on the facility. The greatest land requirements would be for the proposed new Perulack and Centre Relay Compressor Stations, which would require up to 25.4 and 55.6 acres, respectively, for construction, and 11.6 and 15.9 acres, respectively, for operation. Expansions or modifications of existing facilities, or new launcher/receivers or gate valves, would require less area, generally from 0.2 to 20 acres for construction, and less than 1 acre for operation (see table 2.2-1).

2.3 CONSTRUCTION PROCEDURES

The project facilities would be designed, constructed, operated, and maintained in accordance with federal standards, which are intended to adequately protect the public by preventing or mitigating LNG and natural gas pipeline failures or accidents, and ensure safe operation of the facilities. The LNG storage tanks and other facilities at the LNG terminal would be constructed according to the standards outlined by the DOT's "Federal Safety Standards for Liquefied Natural Gas Facilities" at 49 CFR 193, and the National Fire Protection Association's "Standards for the Production, Storage, and Handling of LNG" (NFPA 59A).

The proposed pipeline facilities would comply with DOT regulations at 49 CFR 192, "Transportation of Natural or Other Gas by Pipeline: Minimum Federal Safety Standards." Among other items, these regulations specify material selection, design criteria, corrosion protection, and qualifications for welders and operation personnel. In addition, Dominion would comply with the Commission's regulations at 18 CFR 380.15, regarding the siting and maintenance of pipeline rights-of-way.

Dominion has agreed to construct project facilities following the FERC staff's Upland, Erosion Control, Revegetation and Maintenance Plan (FERC Plan, January 17, 2003 version), and our Wetland and Waterbody Construction and Mitigation Procedures (FERC Procedures, January 17, 2003 version). (The FERC's Plan and Procedures are available for viewing on the FERC Internet website at www.ferc.gov). In addition, Dominion has developed its own Spill Prevention, Control, and Countermeasure (SPCC) Plan for both the LNG terminal expansion and the pipeline facilities. We reviewed the SPCC Plan and found it acceptable. Dominion would also prepare and implement grading permits, Erosion and Sedimentation Control Plan (ESC Plan), and Stormwater Management Plans as required by various state and county agencies. Additional construction procedures are described below.

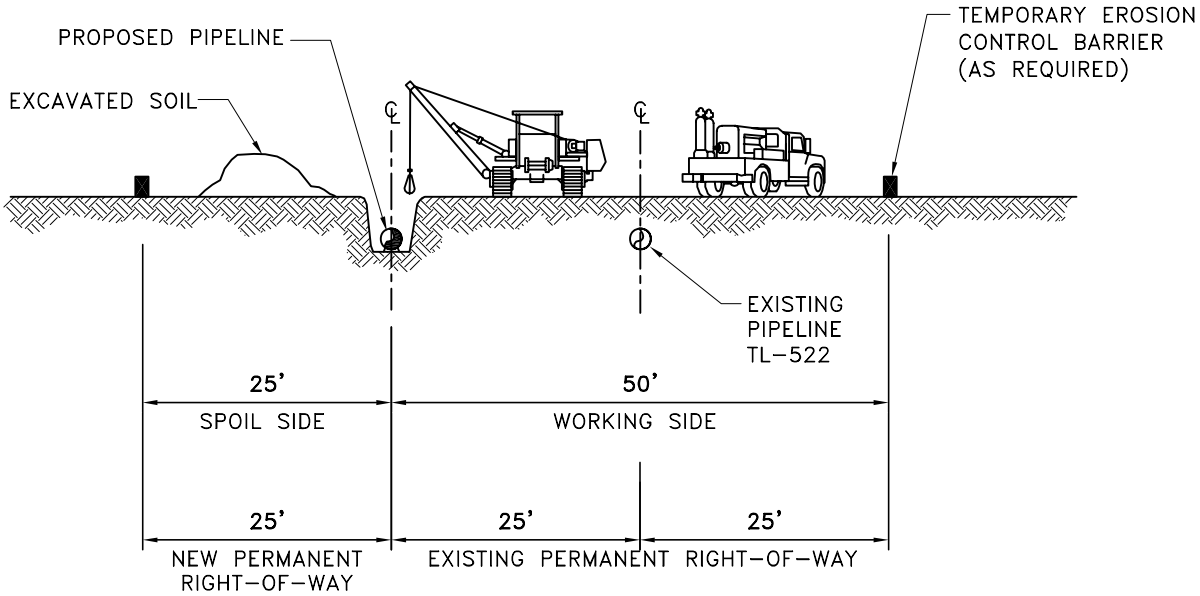

TL-532 PIPELINE ADJACENT TO EXISTING TL-522 PIPELINE

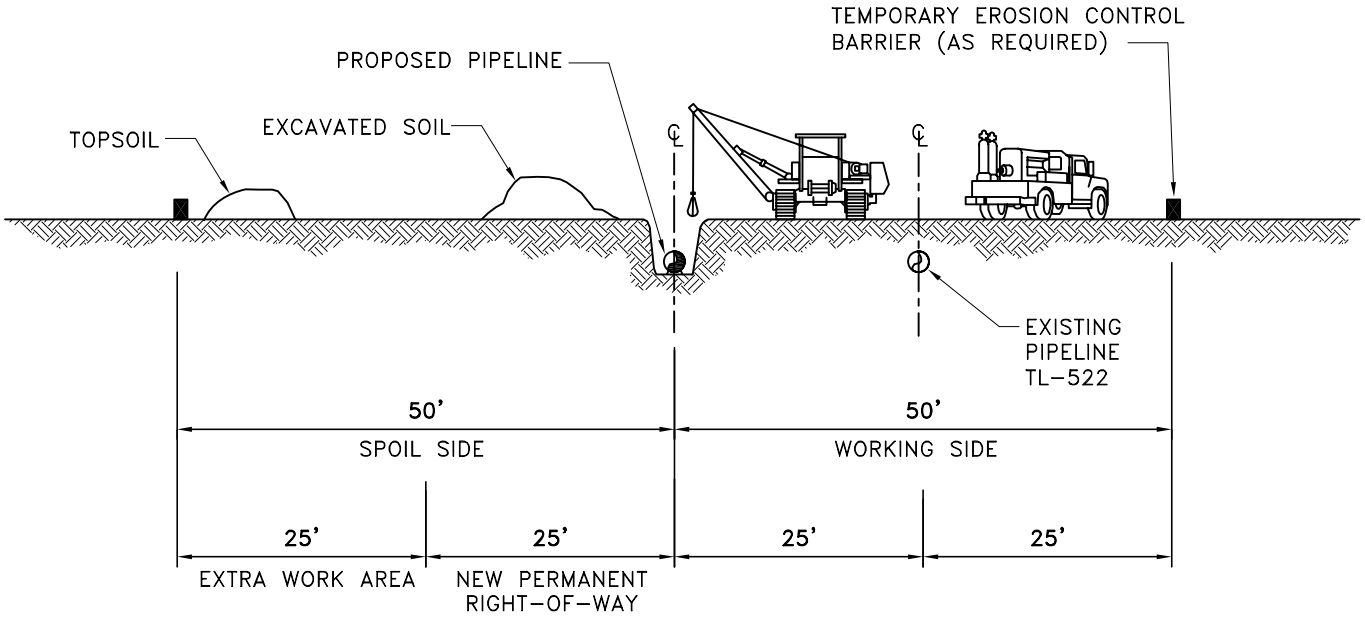

TL-532 PIPELINE ADJACENT TO EXISTING TL-522 PIPELINE
WITH EXTRA TEMPORARY WORKSPACE

FIGURE 2.2-1

COVE POINT EXPANSION PROJECT
TYPICAL RIGHT-OF-WAY CROSS SECTIONS

TL-532 PIPELINE
EXISTING RIGHT-OF-WAY

NOT TO SCALE

CADDFILE: 2965.1001-A007.DWG

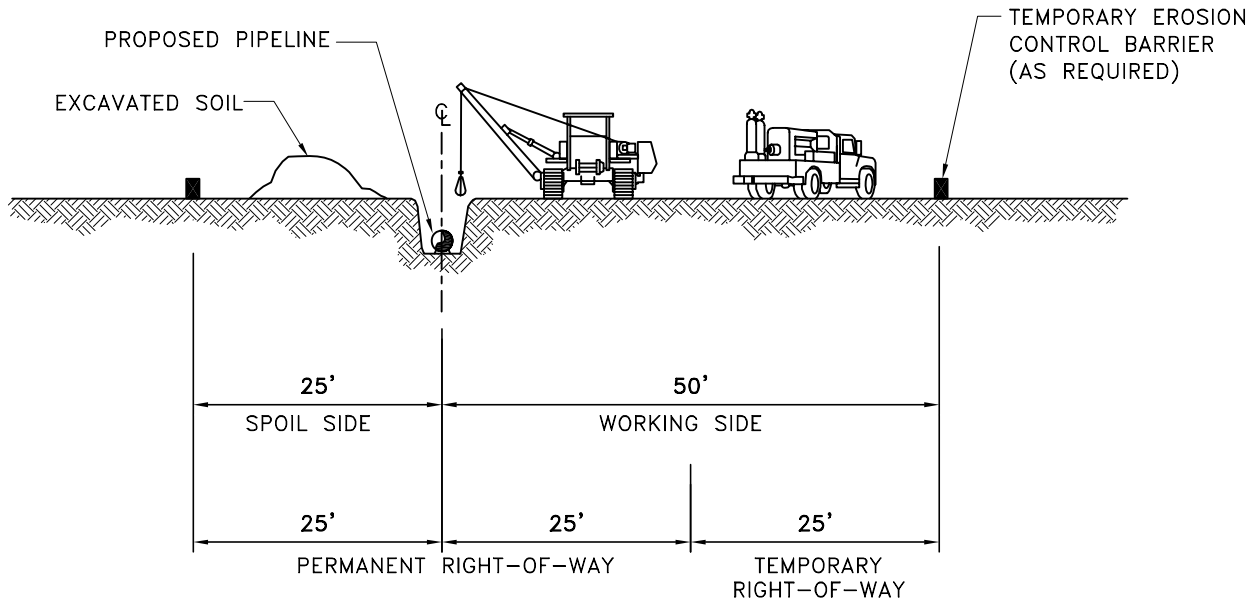

TL-532 PIPELINE ON NEW RIGHT - OF - WAY

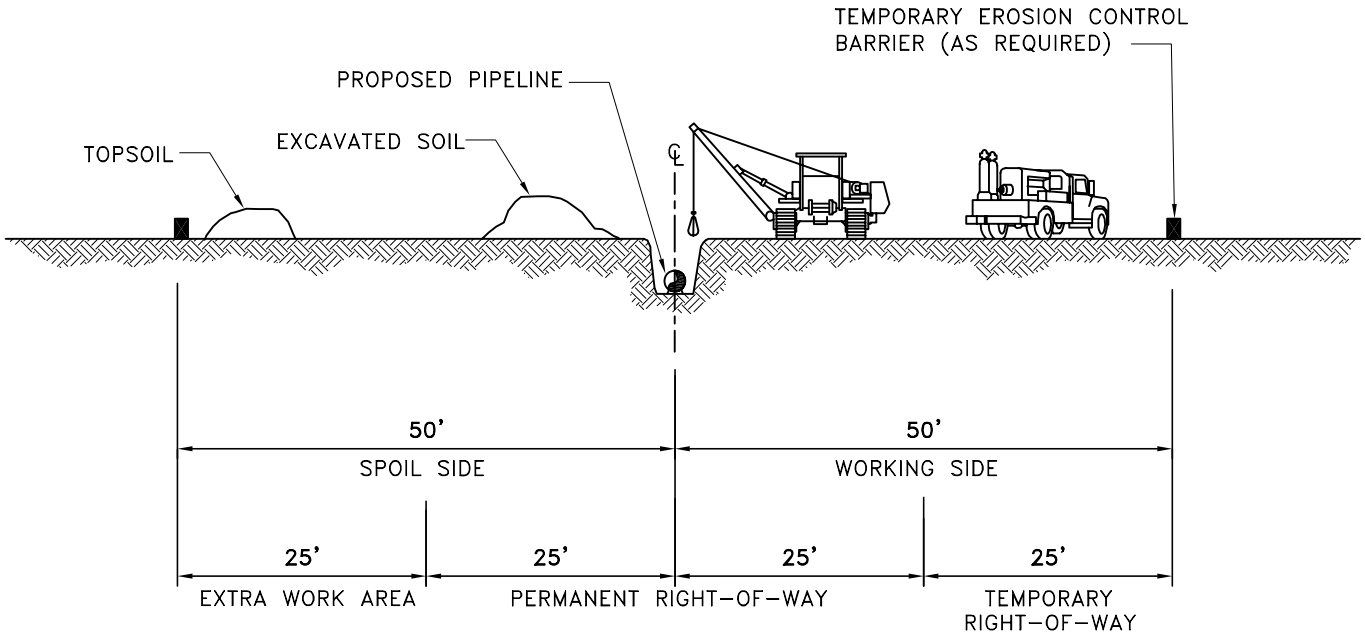

TL-532 PIPELINE ON NEW RIGHT - OF - WAY
WITH EXTRA TEMPORARY WORKSPACE

FIGURE 2.2-2

COVE POINT EXPANSION PROJECT
TYPICAL RIGHT-OF-WAY CROSS SECTIONS

TL-532 PIPELINE
NEW RIGHT-OF-WAY

NOT TO SCALE

CADDFILE: 2965.1001-A008.DWG

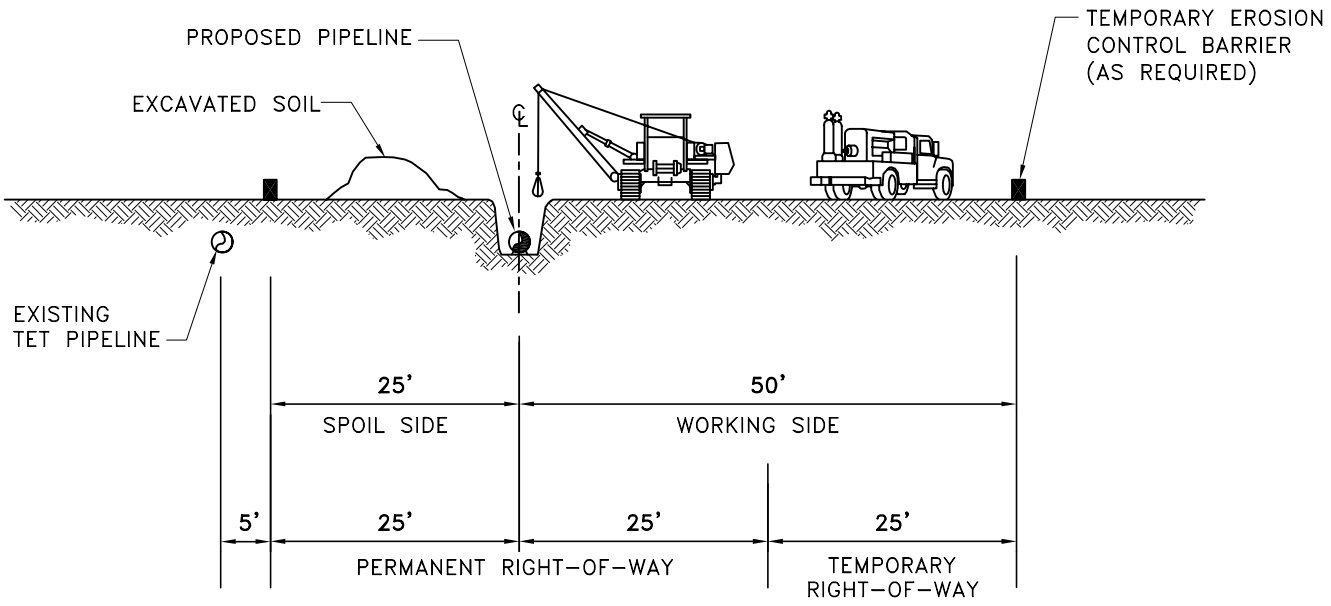

TL-532 PIPELINE ON NEW RIGHT - OF - WAY

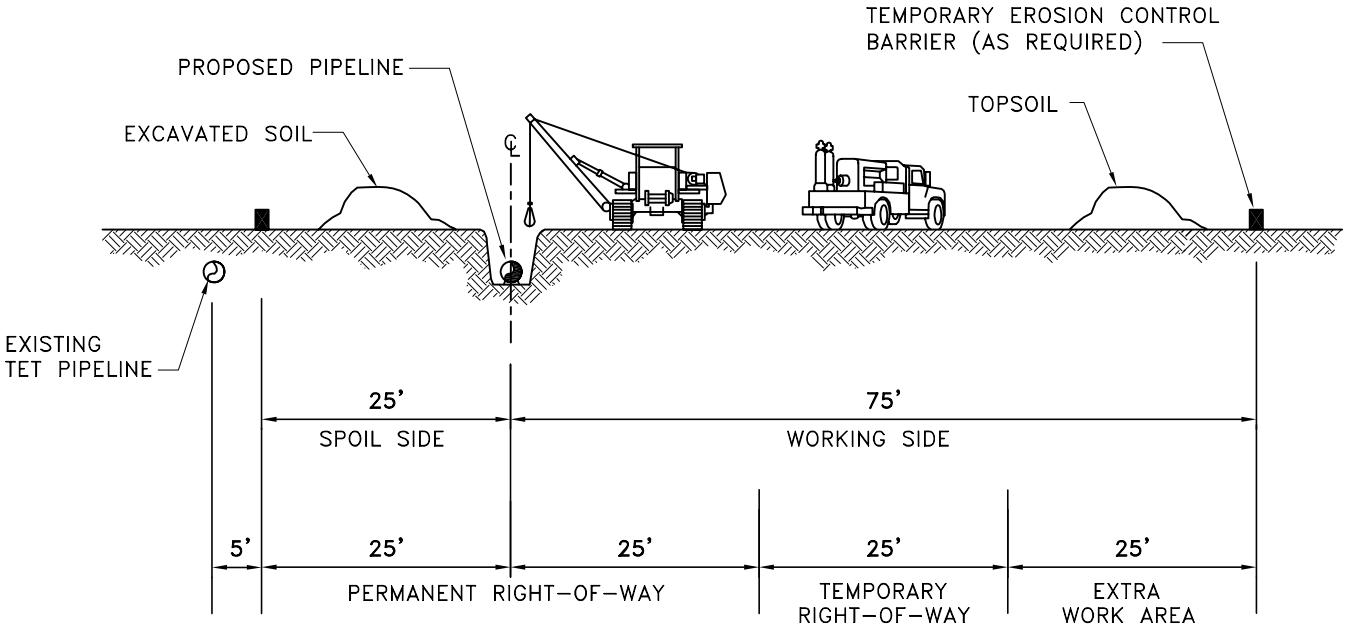

PL-1 EXT 2 PIPELINE ADJACENT TO EXISTING TEXAS EASTERN PIPELINE RIGHT - OF - WAY WITH EXTRA TEMPORARY WORKSPACE

FIGURE 2.2-3

COVE POINT EXPANSION PROJECT
TYPICAL RIGHT-OF-WAY CROSS SECTIONS

PL-1 EXT2 PIPELINE
EXISTING RIGHT-OF-WAY

NOT TO SCALE

CADDFILE: 2965.1001-A009.DWG

2.3.1 Cove Point LNG Terminal Expansion Facilities

The largest of the earth disturbance at the Cove Point LNG Terminal would occur for construction of the LNG storage tanks. Earth disturbance would also be required for site preparation for installation of the new process area facilities and gas turbine generators. The site would first be graded as necessary, and then tank foundations would be excavated and concrete forms set and poured. Under-tank heating would then be installed followed by steel for the bottom of the tank, then erection of the outer tank walls and roof and then the inner tank. Preparation and installation of other equipment proposed at the Cove Point Terminal would generally be concurrent with construction of the LNG storage tanks.

The LNG storage tanks would be hydrostatically tested before they are put into operation. More information about hydrostatic testing is discussed in section 4.3.2 of this EIS.

2.3.2 Pipeline Facilities

2.3.2.1 General Pipeline Construction Procedures

Before the start of construction, Dominion would finalize surveys, locate the centerline and construction workspace, and complete land or easement acquisition as needed. If the necessary easements cannot be obtained through good faith negotiations with property owners, and the Commission has issued a Certificate for the Project to Dominion, it may use the right of eminent domain granted under Section 7(h) of the NGA and the Rules of Civil Procedure to obtain easements.

Figure 2.3-2 shows the typical construction sequence used for an overland pipeline construction spread as summarized below.

Clearing and Grading

Initial clearing operations would include the removal of vegetation and large obstacles such as large rocks and logs from within the construction right-of-way and temporary construction workspace, either by mechanical means (using equipment such as a brush hog) or hand-cutting. The right-of-way limits would be identified and flagged in the field prior to clearing. Before construction, Dominion would identify valuable or locally unique tree specimens as identified in right-of-way agreements or permits. These trees would be protected from potential construction damage, and/or avoided depending on the tree's position relative to pipeline alignment.

To protect properties adjacent to the construction right-of-way, brush and trees would be felled parallel to and within the right-of-way. Marketable timber would be cut to standard lengths, unless the landowner specifies a specific length, and stacked at the edge of the right-of-way or removed. Generally, cleared wood debris would be chipped and left in place or otherwise disposed of according to applicable regulations, permits, and right-of-way agreements. Large material that cannot be chipped or otherwise disposed of would be removed off-site and disposed of at an approved or otherwise authorized facility in uplands (non-waters of the U.S., including wetlands). Dominion would not dispose of brush or other construction debris by burning.

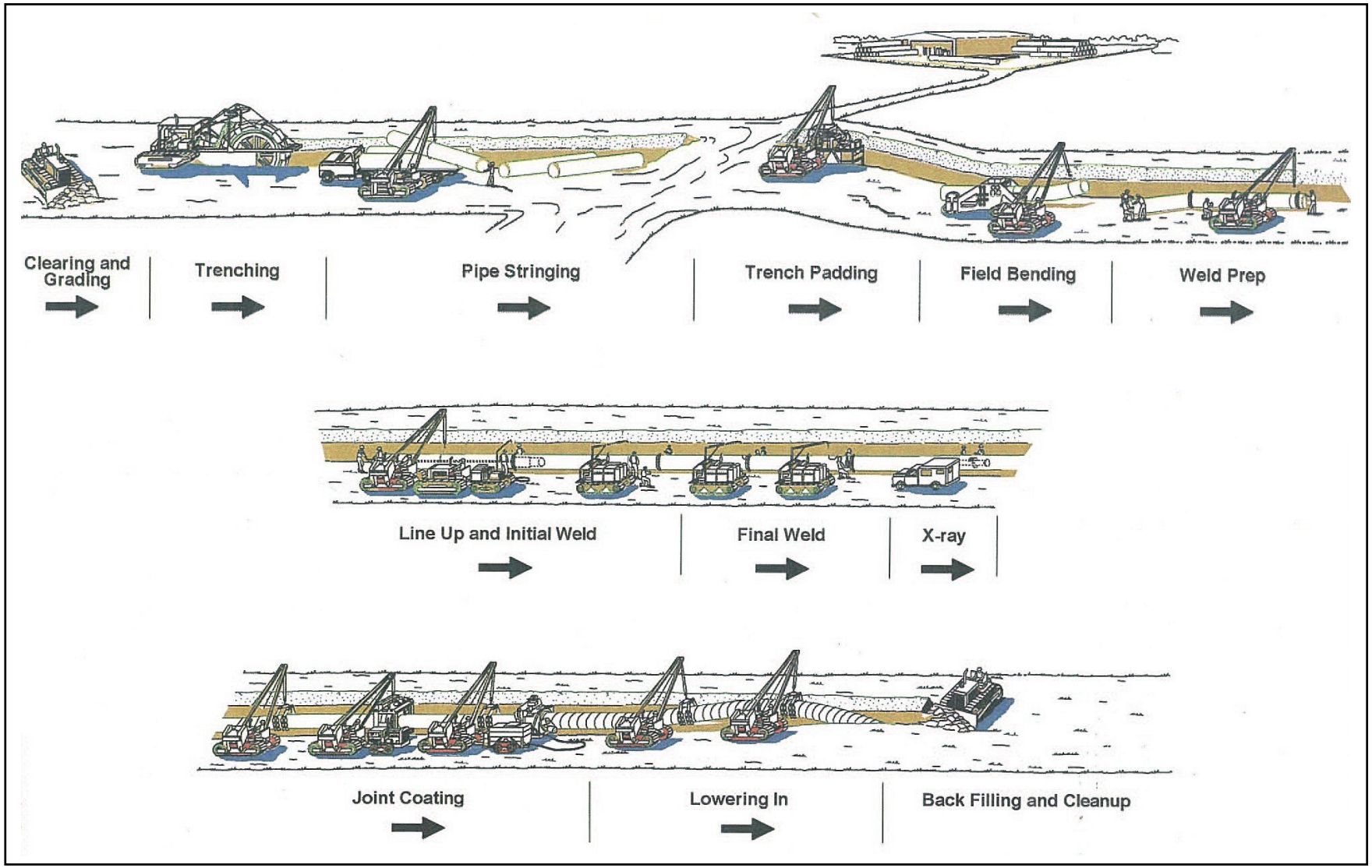

Figure 2.3-2
Cove Point Expansion Project
Typical Pipeline Construction Sequence

During clearing, temporary gated fences would be installed where necessary for livestock control or to control public access to the right-of-way. Temporary entrances constructed of clean rock over geotextile fabric would be installed for access to the right-of-way from roads.

Following clearing, the construction right-of-way and additional temporary workspace would be rough graded as necessary to allow for safe passage of equipment and to prepare a relatively level work surface for pipeline construction. Bulldozers equipped with ripper and grading blades would perform grading activities. Closely following initial disturbance of the soil, erosion controls would be installed at the required locations (see section 4.2.4).

Trenching

Prior to commencing trenching, Dominion would identify and flag buried utility lines. Trench excavation would be performed with a large excavator. Typically, the trench would be about 7-8 feet deep (for a minimum of 3 feet of cover over the pipe) and about 4-5 feet wide. In areas where bedrock is encountered within the trench depth, and where the bedrock cannot be ripped with a backhoe, drilling and controlled blasting would be required. Blasting would be conducted in compliance with all applicable permits and authorizations.

Topsoil and subsoil would be segregated in agricultural, wetland, and residential areas to prevent mixing of topsoil and subsoil. All erosion and sedimentation control structures would be in place before topsoil is stockpiled and set aside. Topsoiling is further discussed in section 4.2.1 of this EIS. Temporary barriers, know as "trench plugs," would be installed at certain distances within the ditch.

Pipe Stringing, Bending, and Welding

After trenching, the pipe would be strung along the right-of-way and placed on wooden pedestals known as "skids." Pipe would be trucked to the right-of-way from temporary pipeyards where pipe would be stockpiled. A hydraulic bending machine would be used in the field to bend individual sections of pipe where necessary to fit the contours of the trench. About 40-foot-long segments of pipe, known as "joints," would be welded together. All welds would be x-rayed to ensure structural integrity and compliance with the requirements established by the DOT and the American Petroleum Institute (API) Standard 1104.

Lowering-In and Backfilling

The trench would be dewatered, cleaned of debris, and padded as necessary before the pipeline is lowered into the trench. As much as is practical, pipeline padding materials would come from within the right-of-way, typically by using a padding machine to dump rock-free subsoil or sand (but not topsoil) into the bottom of the trench. If adequate padding is not available from within the right-of-way, other sources could include sand, sand bags, or polyethylene foam pillows. Permanent trench breakers would then be installed where necessary within the ditch, such as at the base of slopes. The trench would be backfilled first using stored subsoil, then the topsoil. Excess rock would be removed from the top 12 inches of topsoil. A slight crown of soil would be left over the pipeline in upland areas to allow for settling.

Hydrostatic Testing

Prior to placing the new pipelines into service they would be hydrostatically tested. The new pipelines first would be cleaned of any internal dirt, water, or debris by pipeline "pigs"[4] that are propelled through the pipeline by air pressure. The pipelines then would be filled with water obtained from a surface water source or a potable water supply, and hydrostatically tested in a manner that meets or exceeds the Minimum Federal Safety Standards. Dominion has identified potential sources of hydrostatic test water, discussed further in section 4.3.2 of this EIS.

Cleanup and Restoration

Following backfilling, all work areas would be final-graded and restored to preconstruction contours as closely as possible, and in wetlands hydrologic connectivity would be restored. Prior to final grading, all construction debris would be picked up along the right-of-way. Permanent erosion control structures, such as slope breakers, would be installed during final grading, in accordance with the FERC Plan. Our Plan requires that restoration be completed within 20 days after backfilling, unless prevented by inclement weather conditions. Private property such as fences, field roads, and driveways would be restored or repaired as necessary.

Revegetation would be accomplished by seeding disturbed areas in accordance with the recommendations of the local office of the U.S. Department of Agriculture, Natural Resources Conservation Service (NRCS) or as requested by the landowner. Seeding would not be required in active cultivated croplands, unless specifically requested by the landowner. Revegetation is further discussed in section 4.4.2 of this EIS.

2.3.2.2 Special Pipeline Construction Techniques

Residential Areas

Construction in residential areas would be accomplished by conventional pipeline installation, or by specialized stove pipe or drag section techniques depending on the available workspace. The specialized techniques may be used to reduce the workspace and duration of construction activity in the immediate vicinity of residences, and would be used where residences are within 50 feet of the construction work area. For stove pipe construction, a short section of trench is dug, a section of pipe is laid and welded into place, and that section of the trench is backfilled immediately. For drag section construction, several sections of pipe are prefabricated before trenching, the trench is then dug, the drag section installed, and the trench is backfilled immediately. Dominion would also install safety fencing along the edge of the construction right-of-way for 100 feet on either side of a residence, and would maintain access to residences during construction. Lawns and landscaping would be restored immediately after backfilling. See section 4.8.2 for additional discussion of mitigation proposed for residential areas.

Utility, Road, and Railroad Crossings

Prior to construction, Dominion would contact the local “One Call” or “Call Before You Dig” system to determine the location of utilities to be crossed. These utility crossings would then be

[4] Pigs are tools that are used inside the pipeline for cleaning and inspecting the pipe.

marked in the field during pre-construction surveys. Dominion or its contractor would contact the appropriate utility representative directly when possible.

Railroads and paved roads would be crossed by boring underneath the railroad or road. Pits would be excavated on both sides of the road or railroad to a depth necessary for the required depth of cover over the pipeline and for working space for boring equipment. A boring machine uses an auger to drill a tunnel under the road or railroad wide enough for the pipeline, and casing if used, to be pulled through. Unpaved roads would be open cut. During the open cut, usually one lane of traffic would be left open. Steel plates may be used to cover the open trench to allow temporary passage of traffic. Traffic control and other safety requirements would be employed during road crossings as required by applicable road crossing permits.

Utility, road, and railroad crossings would be done according to applicable permits. Local authorities would be kept appraised of the timing of such crossings.

Agricultural Areas

Agricultural areas that would be crossed by the proposed pipelines include pasture used for livestock grazing, hayfields, and active and fallow cultivated crop fields. Special construction measures in agricultural areas would include the segregation of the top 12 inches of topsoil within the right-of-way, and de-compaction of the soil, as needed, once construction is completed. Topsoil would be segregated from the subsoil/trench excavation during the grading, and stockpiled on the working side of the right-of-way until installation of the pipeline is complete. The topsoil would be returned to the right-of-way in the final restoration and cleanup phase of pipeline construction. If either subsoil or topsoil is severely compacted, a paraplow or other deep tillage device would be utilized to break up the soils. Dominion construction personnel would also work with property owners to identify locations of drain tiles prior to construction to avoid damage to those structures. Should damage occur, Dominion would repair these drainage systems with the input of the property owners. Dominion would coordinate with the landowners prior to construction and provide compensation for any crop damages. Section 4.2 of this EIS includes additional discussion of construction within agricultural areas.

Waterbodies

Special construction and mitigation procedures would be followed for waterbody crossings, including the use of the Commission's approved Procedures. Dominion would also implement additional site-specific mitigation as required by applicable permits. Construction across rivers and streams would be accomplished by either trenching across the waterbody (open-cut crossing) or by horizontal directional drill (HDD) underneath the waterbody. Most waterbodies would be open-cut. Open-cut crossings of smaller streams would be accomplished by working from the banks with a backhoe, clam dredge, or dragline. Larger crossings would be accomplished by working off temporary bridges, floating barges, or directly within shallow water depending on the depth and width at the crossing location. The crossings would be completed as quickly as possible, and downstream flow would be maintained at all times. Open-cut crossings can also be accomplished using "dry crossing" techniques, including dam and pump, which involves isolating the construction area and pumping the water flow around the trench, or by a flumed crossing, which involves isolating the construction area, directing the flow across the area

through flumes, and excavating the trench and installing the pipe under the flumes. Dry crossing techniques are typically only used for smaller streams with significant fisheries.

Once the pipeline is installed across a waterbody, the trench would be backfilled using native spoil, and the stream bottom and bank contours restored to as near as possible to preconstruction conditions. Waterbody banks would be seeded and temporarily stabilized with erosion controls.

HDD is generally proposed where conditions in the stream (such as contaminated sediments) or the waterbody's environmental sensitivity make the open-cut technique undesirable or impractical. A directional drill would involve drilling a pilot hole underneath the waterbody and then enlarging that hole until the hole is large enough to accommodate the pipe. Pipe sections would be staged and welded along the right-of-way on the opposite side of the crossing from the drilling operation, and then pulled through the bore hole. HDD typically requires extra temporary work space on both sides of the crossing. Dominion is currently proposing HDD at nine locations, including eight waterbody crossings (table 2.3.2.2-1). See section 4.3.2 of this EIS for additional discussion of construction procedures across waterbodies.

TABLE 2.3.2.2-1

Proposed HDD Crossings

Facility	Crossing	MP location
TL-532 Pipeline	St. Leonard Creek	S1MP4.6
	Hunting Creek	S1MP19.5
	Patuxent River	S1MP21.8
	Zekiah Swamp	S2MP6.2
	Jordan Swamp	S2MP7.5
	Mattawoman Creek	S2MP19.7
PL-1 EXT2 Pipeline	Juniata River	S1MP12.2
	State Route 26	S2MP13.8
	I-80/Bald Eagle Creek	S2MP19.0

Wetlands

Special construction and mitigation procedures would be followed for wetland crossings, including the use of the Commission's Procedures. Dominion would also implement additional site-specific mitigation as required by applicable permits. In wetlands, vegetation would be cut at ground level and removed from the wetland for disposal elsewhere. A 75-foot-wide construction right-of-way would be cleared through wetlands to be crossed by conventional lay. Where wetlands would be crossed by HDD, Dominion would clear a 30-foot-wide right-of-way where the pipelines would not be adjacent to existing rights-of-way and a 10-foot-wide right-of-way if adjacent to existing pipeline right-of-way. Clearing in wetlands, critical areas, and their buffer zones would be by hand tools only to facilitate use of HDD tracking systems and pipeline markers. However, no clearing for HDD crossings would occur in Critical Area Buffers in Maryland. If possible, wetland crossings would be scheduled during the dry period of summer and early fall, avoiding construction in the wetter spring months.

Construction across non-saturated wetlands would generally be accomplished by conventional pipeline construction techniques. In saturated wetlands where conditions allow, crossing would be accomplished by assembling the pipeline in an upland area, lowering it into the trench, and

pushing/pulling it along the trench through the wetland. Equipment operating in wetlands would be minimized, and marsh or swamp mats would be utilized to the extent feasible. Ground contours and surface hydrology and connectivity would be restored, and temporary and permanent erosion controls installed to prevent sedimentation. Vegetation would be allowed to re-establish naturally, or a native seed mix would be used, and invasive species would be controlled. See section 4.5.2 for additional discussion of construction and mitigation procedures in wetlands.

Rugged Topography

At certain locations, the proposed pipelines in Pennsylvania would cross steep side hill areas or steep slopes greater than 50 percent and bedrock at fairly shallow depths. Construction on steep slopes could involve use of winch tractors to hold construction equipment and dead man cables to hold pipe sections in place until welded together and installed. Areas of side hill construction may require terracing, or "two-toned" right-of-way in which the side slope is cut and graded to provide two levels of work area to allow for safe operation of equipment. Additional construction right-of-way width may be required in areas of side slope.

2.3.2.3 Other Aboveground Facility Construction Procedures

Compressor Stations

Construction of the two new compressor stations proposed by Dominion would first require site clearing, if necessary, and then grading to establish appropriate contours for building construction. Grading and contouring would generally not be required at sites of existing compressor stations where additional compression or modifications are proposed. Following site preparation, utilities and building foundations would be installed, and compressor and office buildings erected. Modifications or additions to existing compressor stations would require an addition to existing buildings, or would occur entirely within existing buildings with no new buildings required. Equipment would then be installed in the buildings and tested. The station or new equipment would be tied in to the pipeline system; and the station site cleaned up, landscaped, and fenced.

Pig Launchers/Receivers and Valves

Pig launchers/receivers are aboveground extensions of the pipeline used to install or retrieve internal pipeline tools. Mainline valves are installed at specified intervals along the pipeline to provide flow control, and include small amounts of aboveground piping. These aboveground facilities would be installed within the permanent pipeline right-of-way during pipeline construction. Each site would be fenced for security following construction.

2.4 CONSTRUCTION SCHEDULE

Dominion has requested a Commission Certificate for the Project in December 2005 and has provided a construction schedule based on this request. Based on this schedule, construction of the LNG terminal expansion facilities would begin in March 2006 and require approximately 30 months for site work, construction, and testing. The LNG terminal expansion facilities would be ready for service in August 2008.

Construction of the various pipeline and other aboveground facilities would occur between spring 2006 and August 2008. Dominion proposes to conduct various HDD crossings during 2006, which would provide for contingency crossing plans during 2007 in the event any HDD was not successful. The majority of pipeline construction would occur between March/April and August 2008. Because of project filings made after the initial application, the potential date for issuance of a Commission Certificate has been extended to first quarter 2006, which would affect the potential construction schedule accordingly.

2.5 ENVIRONMENTAL COMPLIANCE AND MONITORING

Dominion would implement environmental compliance and monitoring requirements from the FERC's Plan and Procedures during construction of the LNG terminal facilities and pipelines. Dominion would also incorporate compliance and monitoring requirements from federal, state, and local permits obtained for the Project.

In accordance with the FERC's Plan and Procedures, Dominion would conduct environmental training for construction and contractor personnel before construction and periodically during construction. Dominion would employ at least one environmental inspector for construction of the LNG terminal facilities, and at least one environmental inspector for each construction spread for the pipelines. The environmental inspectors would be responsible for monitoring construction activities for compliance with the conditions of the FERC Certificate, and all other applicable federal, state, and local permits. The environmental inspectors would have independent status, but would report to Dominion's Chief Inspector, and would have stop-work authority in the event of a noncompliance issue that requires corrective action.

In addition, the FERC would have its own independent environmental inspectors monitor the Project for compliance with the Commission's environmental conditions.

2.6 OPERATION AND MAINTENANCE

2.6.1 Cove Point LNG Terminal Expansion Facilities

Dominion currently operates the Cove Point LNG Terminal according to the regulatory requirements of the DOT regulations at 49 CFR Part 193 and the Coast Guard regulations at 33 CFR Part 127. Dominion would integrate all services and facilities authorized by the Commission in the Cove Point Expansion Project into the existing safety program currently in operation at the terminal. All new operations and maintenance personnel would be trained to perform their jobs properly and safely. All new terminal operators would be trained in the potential hazards associated with LNG, cryogenic operations, and the proper operation of all the equipment. The additional operators would meet all the training requirements of the Coast Guard, DOT, and other regulatory agencies.

The Cove Point LNG Terminal currently has a full-time maintenance staff to conduct routine maintenance and minor overhauls. As a result of the proposed Project, approximately 38 additional individuals would be permanently employed at the Cove Point LNG Terminal to support operations. Major overhauls and other major maintenance would be handled by hiring contract maintenance personnel specifically trained to perform the maintenance work.

The Cove Point LNG Terminal would operate and maintain the additional facilities in compliance with National Fire Protection Association (NFPA) 59A, 49 CFR Part 193, 33 CFR 127, and other applicable federal and state regulations. Dominion has prepared manuals pursuant to 49 CFR 193.2503 and 193.2605 and Sections 11.3.1 and 11.5.2 of NFPA 59A that address specific procedures for the safe operation and maintenance of the LNG storage and processing facilities. Those manuals were approved before the reactivation of the terminal, and would be applied to the expansion facilities. In accordance with 33 CFR 127, Dominion has prepared an operation manual that addresses specific procedures for the safe operation of the ship unloading facilities. To the extent necessary, Operations and Maintenance Plans for the Cove Point LNG Terminal would be updated and revised to include procedures relative to the expansion facilities.

Dominion has in place training programs for its personnel that would be extended to any new operating personnel in order to ensure that the facility personnel are familiar with and understand the importance of adherence to safe procedures. These procedures address safe startup, shutdown, cool-down, purging, etc., as well as routine operation and monitoring. Particular attention is given to coordinate and involve the appropriate local officials in the vicinity of the Cove Point LNG Terminal.

Dominion is participating in a pilot program organized by the National Association of State Fire Marshals (NASFM), and funded by DOT, to test a comprehensive curriculum for use at the state and local levels by emergency responders. NASFM has developed a white paper, which is now under review by DOT, the Department of Homeland Security, National Institute of Standards and Technology, FM Global Insurance, the Commission, MIT and the LNG Terminal operators at four pilot sites, including Cove Point. This paper would be the basis for the curriculum, which would guide the NASFM in its work with local authorities and the communities they serve.

2.6.2 Pipeline and Associated Aboveground Facilities

Dominion would operate and maintain the proposed facilities in accordance with the applicable safety standards established by the DOT Minimum Federal Safety Standards as specified in 49 CFR 192 and in accordance with the NGA. The pipelines would be patrolled from the air on a periodic basis. This patrol would provide information on possible leaks, encroachment into the right-of-way, third party construction activity near the pipelines, erosion, waterbody crossings, exposed pipe, or population density changes in the vicinity of the pipelines. Dominion would also coordinate with local development authorities to ensure that construction activity near the pipeline does not encroach on the right-of-way. Operation would also include monitoring of cathodic protection units (installed for corrosion control) along the pipelines to ensure proper functioning.

Maintenance activities would include regularly scheduled gas leak surveys, and measures necessary to repair any leaks. All fence posts, signs, marker posts, aerial markers, and decals would be painted or replaced as necessary to ensure the pipeline location remains visible from the air and ground. All valves would be periodically inspected and greased. Maintenance would also include periodic seasonal mowing of the permanent right-of-way, vegetation control around aboveground facilities, and the repair of terraces or waterbars as necessary. Dominion would not use herbicides or pesticides within 100 feet of a wetland or waterbody unless approved in appropriate permits.

The existing compressor stations that are proposed for expansion or modification in this Project are manned stations. The proposed new Perulack and Centre Relay Compressor Stations would also be manned stations.

2.7 SAFETY CONTROLS

2.7.1 Cove Point LNG Terminal Facilities

The LNG terminal expansion facilities would be sited, designed, constructed, operated, and maintained in compliance with federal safety standards. Federal siting and design requirements for LNG terminal facilities are summarized in table 2.7.1-1.

TABLE 2.7.1-1

Federal Siting and Design Requirements for LNG Facilities

Requirement	Description
Thermal Radiation Protection (49 CFR 193.2057 and Section 2.2.3.2 of NFPA 59A)	This requirement is designed to ensure that certain public land uses and structures outside the LNG facility boundaries are protected in the event of an LNG fire.
Flammable Vapor-Gas Dispersion Protection (49 CFR 193.2059 and Sections 2.2.3.3 and 2.2.3.4 of NFPA 59A)	This requirement is designed to prevent a flammable vapor cloud associated with an LNG spill from reaching a property line of a property suitable for building.
Wind Forces (49 CFR 193.2067)	This requirement specifies that all facilities be designed to withstand wind forces of not less than 150 miles per hour without the loss of structural integrity.
Impounded Liquid (Section 2.2.3.8 of NFPA 59A)	This requirement specifies that liquids in spill impoundment basins cannot be closer than 50 feet from a property line of a property suitable for building or a navigable waterway.
Container Spacing (Section 2.2.4.1 of NFPA 59A)	This requirement specifies that LNG containers with capacities greater than 70,000 gallons must be located a minimum distance of 0.7 times the container diameter from the property line or buildings.
Vaporizer Spacing (Section 2.2.5.2 of NFPA 59A)	This requirement specifies that integral heated vaporizers must be located at least 100 feet from a property line of a property suitable for building and at least 50 feet from other select structures and equipment.
Process Equipment Spacing (Section 2.2.6.1 of NFPA 59A)	This requirement specifies that process equipment containing LNG or flammable gases must be located at least 50 feet from sources of ignition, a property line of a property suitable for building, control rooms, offices, shops, and other occupied structures.
Marine Transfer Spacing (33 CFR 127.105)	This requirement specifies that each LNG unloading flange must be located at least 985 feet from any bridge crossing a navigable waterway.

Spill Containment

Each of the LNG storage tanks would be surrounded by an earthen berm sized to contain 110 percent of the tank volume. Within each tank impoundment, there would be a sub impoundment sized for a one-hour spill from a tank withdrawal connection.

Hazard Detection System

The Cove Point LNG Terminal has an existing monitoring system able to detect low-temperature LNG spills, release of gas, and fire. The existing terminal hazard detection system would be expanded to include the proposed expansion facilities.

Fire Protection System

The Cove Point LNG Terminal has an existing fire protection system, including an emergency shutdown system. The existing terminal fire protection system would be expanded to include the proposed expansion facilities.

2.7.2 Pipeline and Associated Aboveground Facilities

Corrosion Protection and Detection Systems

During construction of the proposed facilities, Dominion would install a cathodic protection system to prevent or minimize corrosion of the buried pipeline and aboveground facilities. The cathodic protection system impresses a low-voltage current on the pipeline to offset natural soil and groundwater corrosion potential. The condition of the pipe coating and the effectiveness of the cathodic protection system would be monitored during regularly scheduled cathodic protection surveys in accordance with federal standards and regulations. Cathodic protection surveys usually require walking the pipeline right-of-way with monitoring instruments. Repairs to the pipe, the pipe coating, or the cathodic protection system would be made as appropriate.

Emergency Response Procedures

The proposed pipelines and aboveground facilities must be designed, constructed, operated, and maintained in accordance with 49 CFR 192. The DOT regulations are intended to ensure adequate protection for the public and to prevent natural gas facility accidents and failures. Part 192 specifies material selection and qualification; minimum design requirements; and protection from internal, external, and atmospheric corrosion. Part 192 also prescribes the minimum standards for operating and maintaining pipeline facilities, including the requirement to establish a written plan governing these activities. Under Section 192.615, each pipeline operator must also establish an emergency plan that includes procedures to minimize the hazards in a natural gas pipeline emergency. Key elements of the plan include procedures for:

- receiving, identifying, and classifying emergency events, gas leakage, fires, explosions, and natural disasters;
- establishing and maintaining communications with local fire, police, and public officials, and coordinating emergency response;
- making personnel, equipment, tools, and materials available at the scene of an emergency;
- protecting people first and then property, and making them safe from actual or potential hazards; and
- emergency shutdown of system and safe restoration of service.

Part 192 also requires that each operator must establish and maintain a liaison with appropriate fire, police, regulatory, and public officials to learn the resources and responsibilities of each organization that may respond to a natural gas pipeline emergency, and to coordinate mutual assistance. The operator must also establish a continuing education program to enable customers, the public, government officials, and those engaged in excavation activities to recognize a gas pipeline emergency and report it to appropriate public officials.

2.8 FUTURE PLANS AND ABANDONMENT

Dominion has no reasonably foreseeable plans for future expansion or abandonment of the facilities proposed in the Project. Dominion has identified two non-related projects at the Cove Point LNG terminal. On July 26, 2005, Dominion filed an application in Docket No. CP05-395-000 under Section 3(a) of the NGA and Part 153 of the Commission's regulations for authorization to construct its Vaporizer Reactivation Project. The Vaporizer Reactivation Project would include recommissioning and placing back into service an existing, but currently inactive, LNG vaporizer. Dominion has stated that in the fall of 2005, it will file a second project, the Post-Expansion Equipment Project, which would include installation of minor equipment designed to eliminate interruptions to the incremental sendout made available by the Vaporizer Reactivation Project. Both of these projects will be addressed in a separate Environmental Assessment (EA) prepared by FERC.

2.9 NONJURISDICTIONAL FACILITIES

Under Section 3 of the NGA, the FERC considers all relevant factors bearing on the siting of LNG import terminals. Under Section 7 of the NGA, the FERC is required to consider, as part of a decision to certificate jurisdictional facilities, all facilities that are directly related to the Project where there is sufficient federal control and responsibility to warrant environmental analysis as part of this jurisdictional proceeding. The jurisdictional facilities for the Cove Point Expansion Project are discussed in detail in this EIS.

Occasionally, proposed projects have associated facilities that do not come under the jurisdiction of the Commission. We have identified no nonjurisdictional facilities that would be associated with the proposed Project.