APPENDIX G

EROSION CONTROL AND REVEGETATION PLAN
FOR THE CAPACITY REPLACEMENT PROJECT

Northwest Pipeline Corporation

Erosion Control and Revegetation Plan (ECR Plan)

Capacity Replacement Project

Revised
April 2005

Table of Contents

1.0 INTRODUCTION G-1
1.1 Schedule G-1
2.0 SITE DESCRIPTION G-1
2.1 Pipeline Facilities G-1
2.2 Existing Site Conditions G-2
2.3 Proposed Construction Activities G-2
2.3.1 Pipeline Construction G-3
2.3.1.1 Pre-Construction Survey G-3
2.3.1.2 Clearing and Grading G-3
2.3.1.3 Installation of Erosion Control BMPs G-4
2.3.1.4 Topsoiling G-4
2.3.1.5 Trenching G-5
2.3.1.6 Pipe Stringing G-5
2.3.1.7 Welding and Coating Pipe G-5
2.3.1.8 Lowering Pipe and Backfilling G-5
2.3.1.9 Hydrostatic Testing G-6
2.3.1.10 Restoration G-6
3.0 BEST MANAGEMENT PRACTICES G-6
3.1 Temporary Erosion Control Procedures G-8
3.1.1 Construction Ingress and Egress G-8
3.1.2 Sediment Barriers G-8
3.1.3 Temporary Slope Breakers G-9
3.1.4 Mulch G-9
3.1.5 Erosion Control Fabric G-10
3.1.6 Dust Control G-10
3.1.7 Waterbody Crossings G-10
3.1.8 Wetland Crossings G-11
3.1.9 Spill Prevention and Equipment Fueling and Maintenance G-12
3.1.10 Material Delivery and Storage G-12
3.2 Permanent Erosion Control Measures G-12
3.2.1 Trench Breakers G-12
3.2.2 Permanent Slope Breakers G-13
3.2.3 Soil Compaction G-13
3.2.4 Revegetation G-13
4.0 MAINTENANCE AND PERIODIC EVALUATION G-13
5.0 HYDROSTATIC TEST WATER AND DEWATERING G-14
5.1 Hydrostatic Testing G-14
5.2 Dewatering G-14
5.3 Water Discharge G-14
6.0 NON-STORMWATER DISCHARGES G-14
7.0 RESTORATION AND REVEGETATION G-15
7.1 Recontouring G-15
7.2 Construction Debris Disposal G-15
7.3 Soil Compaction G-16
7.4 Scarification G-16
7.5 Soil Replacement G-17
7.6 Rock Removal G-17
7.7 Seedbed Preparation G-17
7.8 Fertilization G-17
7.9 Seed Mixtures and Supplemental Plantings G-18
7.10 Seeding Timing G-21
7.11 Seeding Methods G-21
7.12 Mulch G-22
7.13 Grazing Deferments G-22

7.14 Noxious Weeds G-22
7.15 Maintenance G-24
8.0 REFERENCES G-25

List of Tables

Table 1. Recommended Seed Mixtures G-20
Table 2. WDNR Recommended Seed Mixtures G-21

List of Attachments

Attachment A BMP Typicals
Attachment B Soil Testing Laboratories

1.0 INTRODUCTION

The intent of this Plan is to outline the erosion control and revegetation procedures that Northwest Pipeline Corporation (Northwest) will utilize during construction of the Capacity Replacement Project. The Capacity Replacement Project will involve construction of 79.5 miles of 36-inch-diameter pipeline loop within Northwest's existing mainline system right-of-way in western Washington in Whatcom, Skagit, Snohomish, King, Pierce and Thurston Counties. New tie-in assemblies (launchers and receivers) will be located at the ends of each loop and intermediate block valves will be installed within the proposed construction right-of-way. Most of these proposed facilities will be collocated with other existing facilities. Therefore, these new facilities will be installed within existing graded, graveled and fenced facilities or will be expansions of existing facilities. In addition to the pipeline loops, Northwest proposes to modify five existing compressor stations and undertake minor independent actions at various locations to disconnect the 26-inch-diameter mainline from the Northwest system.

1.1 Schedule

Pipeline construction is primarily scheduled to commence in March of 2006 and will require approximately 8 months to complete. However, Northwest proposes to install three horizontal directional drills (HDDs) in late 2005 if weather permits. In addition, Northwest plans to begin preparing yards to receive pipe and materials at offsite yards in January 2006. New facilities are planned for an in-service date of November 1, 2006 in order to meet the requirements of a U.S. Department of Transportation (DOT) schedule for replacement of the existing 26-inch-diameter mainline.

2.0 SITE DESCRIPTION

2.1 Pipeline Facilities

The 79.50 miles of pipeline will be constructed in four loop segments including:

1) Sumas Loop (22.68 miles) will be constructed entirely within Whatcom County;
2) Mount Vernon Loop (22.50 miles) will be constructed in Skagit and Snohomish counties;
3) Snohomish Loop (11.89 miles) will be constructed in Snohomish and King counties; and
4) Fort Lewis Loop (22.43 miles) will be constructed in Pierce and Thurston counties.

Tie-in assemblies and block valves will be installed within the proposed construction right-of-way for the loops and will be primarily collocated with other existing facilities. These sites will be permanently stabilized with gravel or lie within existing graded, graveled and fenced facilities. Therefore, these aboveground facilities are not discussed further in this Plan. Modification activities at all compressor stations, with the exception of Chehalis, will occur within the existing station properties on previously disturbed soils. Therefore, except for the Chehalis Compressor Station, the other compressor station facilities should not require the procedures described in this plan. Disturbed areas at the Chehalis Compressor Station will follow the procedures outlined in this plan for both upland and wetland areas.

The Capacity Replacement Project will also disconnect the 26-inch-diameter pipeline at 24 locations along the proposed loops and 48 other locations along the remainder of Northwest's existing system between Sumas and Washougal, Washington. The abandonment activities will be minor but will require varying levels of disturbance based on the size of the temporary extra workspaces and the overlap of these temporary extra workspaces with the existing graded,

graveled and fenced facilities. In all cases, the temporary extra workspaces will be within the existing, permanent easement. Northwest will utilize the procedures described in this Plan to minimize erosion and to revegetate all disturbed areas.

2.2 Existing Site Conditions

The project is situated within the Puget-Willamette Lowlands Subdivision of the Pacific Mountain Physiographic Division (Radbruch-Hall *et al*., 1976). The Puget-Willamette Lowlands extend from the Canadian border southward to Eugene, Oregon between the Coast Ranges and the Cascade Mountains. The project area is generally nearly level and rolling, in areas where bench-like glaciated plains and floodplains are crossed; however, short sections of moderately steep, to steep slopes are traversed where the loops ascend/descend slopes adjacent to floodplains or foothill slopes.

The climate of the project area is greatly tempered by winds from the Pacific Ocean. Summers are fairly warm, but hot days are rare. Winters are cool, but snow and freezing temperatures are not common. During summer, rainfall is extremely light, so crops growing actively during this period need irrigation. Several weeks in summer often pass without precipitation. During the rest of the year, rains are frequent, especially in the late fall and winter.

In the winter, the average temperature is approximately 40 ^{o}F and the average daily minimum temperature is about 33 ^{o}F. In the summer, the average temperature is about 62 ^{o}F and the average daily maximum temperature is approximately 75 ^{o}F. Total annual precipitation is about 32 inches in the northern portion of the project area near Mount Vernon and 51 inches in the south in Thurston County near Olympia. Of the total annual precipitation, about 25 to 30 percent usually falls during April through September, which includes the growing season for most crops. The average snowfall is approximately 10 to 14 inches, and thunderstorms occur about six to seven times each year, with half occurring in the summer. In most winters one or two storms in the project area bring strong and sometimes damaging winds, and in some years the accompanying heavy rains cause serious flooding. The Soil Surveys of Whatcom, Skagit, Snohomish, King, Pierce and Thurston Counties (Natural Resources Conservation Service (NRCS), 1992,1989, 1983, 1973, 1979 and 1990) were used to determine the soil types and characteristics crossed by the pipeline loops.

The loops associated with the Capacity Replacement Project will cross 154 waterbodies including perennial and intermittent rivers and streams as well as jurisdictional wetland and upland ditches. Of these 154 waterbodies, 99 are intermittent streams or ditches which are expected to be dry at the time of construction assuming a summer construction schedule. There are 55 perennial waterbodies crossed in all four loops. One additional intermittent waterbody would be crossed by the abandonment activities. In addition, the project will cross 51,744 feet of wetlands in more than 250 different wetland systems.

2.3 Proposed Construction Activities

Northwest's project will be designed, constructed, operated, and maintained in accordance with the DOT regulations in 49 CFR Part 192, *"Transportation of Natural and Other Gas by Pipeline: Minimum Federal Safety Standards*"; 18 CFR Part 2.6, "*Guidelines to be Followed by Natural Gas Pipeline Companies in the Planning, Clearing, and Maintenance of Rights-of-Way and the Construction of Aboveground Facilities*"; and other applicable federal and state regulations. In addition to the DOT requirements listed above, Northwest will also construct and reclaim the pipeline and aboveground facilities in accordance with the Federal Energy Regulatory

Commission (FERC or Commission) staff's *Wetland and Waterbody Construction and Mitigation Procedures* (FERC staff's Procedures) and the FERC staff's *Upland Erosion Control, Revegetation, and Maintenance Plan* (FERC staff's Plan).

2.3.1 Pipeline Construction

Pipeline construction will primarily occur between March 1 and November 1, 2006. Northwest will begin preparing yards to receive materials and pipe at select contractor and pipe yards in January 2006. Reclamation for the loops will occur during the fall of 2006. Final reseeding of the sites to be disconnected may occur in the spring of 2007. The construction sequence is as follows with each sequence described in more detail in the following sections:

- Preconstruction survey;
- Clearing and grading;
- Installation of Erosion Control Best Management Practices (BMPs);
- Topsoiling;
- Trenching;
- Pipe stringing;
- Welding and Coating Pipe;
- Lowering Pipe and Backfilling;
- Hydrostatic Testing; and
- Restoration.

2.3.1.1 Preconstruction Survey

The limits of disturbance will be clearly marked/staked prior to construction including the construction right-of-way, temporary extra workspace, access roads and staging/stockpile areas. Utility lines and agricultural drainages will be located and marked to prevent accidental damage during pipeline construction. Sensitive areas to be protected from disturbance will be marked with t-post and brightly colored rope and flagging, or construction fence so as to be clear to equipment operators. These areas will also be located on the environmental alignment sheets and presented during preconstruction environmental training. Equipment will only be allowed to enter and operate within the delineated limits of disturbance, access roads, etc. Flagging, signs and other markings identifying the limits of disturbance will be maintained through all phases of construction and routinely checked by the Environmental Inspector (EI). Construction of the loops will primarily use a 95-foot wide construction right-of-way and temporary extra workspace corridor. However, a number of areas will require the construction right-of-way to be reduced to 75 feet in width, such as in wetlands and in residential areas to minimize disturbance. In most cases, temporary extra workspaces have also been located at least 50 feet away from wetland boundaries to minimize impacts to wetland buffers and riparian areas.

2.3.1.2 Clearing and Grading

The flagged limits of disturbance will be maintained throughout all construction phases and will be monitored by Northwest's EI so activities are restricted to certificated limits. Brush and trees within the construction right-of-way and temporary extra workspaces will be felled or sheared so as to prevent damage to adjacent trees and structures and will be felled away from wetlands and waterbodies. Any debris entering a waterbody as a result of felling and yarding of timber will be removed as soon as practical after entry into the waterbody and shall be placed outside the 100-year floodplain. If the waterbody is dry, debris will be removed prior to the onset of high flows. Logs firmly embedded in the bed or bank of waterbodies that are in place prior to felling and yarding of timber will not be disturbed, unless they prevent trenching and fluming

operations. Any existing logs that are removed from waterbodies to construct the pipeline crossing will be returned to the waterbody after the pipeline has been installed, backfilling is complete, and during the time the streambanks are being restored. Logs and slash will not be yarded across Washington State Department of Natural Resources (WDNR) Type 1, 2, 3 or 4 Streams, and where possible, across WDNR Type 5 Streams. Where temporary crossing of Type 5 Streams is necessary, the direction of log movement between streambanks shall be designed to minimize sediment delivery to streams. Landings for clearing operations will not be located in wetlands and where feasible logs yarded out of wetlands or riparian zones will be skidded with at least one end suspended from the ground so as to minimize soil disturbance. Construction through these areas will be minimized and the logs will be transported so as to minimize damage to adjacent trees and vegetation, where possible. All clearing operations will follow conditions specified in the project's Hydraulic Project Approval issued by the Washington Department of Fish and Wildlife (WDFW) and other conditions of required permits that relate to clearing activities.

No off right-of-way vegetation shall be cleared between the temporary extra workspaces and the edge of streambanks and/or wetlands. Grading of the construction right-of-way in upland areas shall be limited to the minimum required to provide a safe working area necessary to construct the pipeline. Vegetation in wetlands will be cut off at ground level, leaving existing root systems in place. Pulling of tree stumps and grading activities will be limited to directly over the trench. Northwest will not grade or remove stumps or root systems from the rest of the right-of-way in wetlands unless it is determined that safety-related construction constraints require removal of tree stumps from under the working side of the right-of-way. Minimizing stump and root system removal will accelerate restoration efforts by allowing sprouting species to reestablish from existing root systems.

2.3.1.3 Installation of Erosion Control BMPs

On recent Northwest projects, temporary erosion control measures have been installed immediately after clearing and prior to grading (initial soil disturbance). Installation of temporary erosion control measures prior to clearing is ineffective because the brush must be cleared to allow installation and because the BMPs are removed by the clearing activities and must be re-installed. Near waterbodies and wetlands (and their buffers), it will be determined in the field by the EI if it is necessary to install temporary erosion control measures (i.e., sediment barriers) prior to clearing activities to minimize the potential for runoff to enter a wetland or waterbody. All erosion control devices will be routinely inspected and any damaged or temporarily removed structures will be replaced at the end of each working day. Temporary erosion control measures will be maintained until successful revegetation has been achieved. Section 3.1 describes in detail the temporary erosion control procedures that will be implemented during project construction to minimize potential impacts from erosion and sedimentation.

2.3.1.4 Topsoiling

The potential mixing of topsoil with subsoil from construction activities could result in a loss of fertility of the soil. To prevent mixing of the soil horizons or incorporation of excess rock into the topsoil, topsoil segregation will be performed. The FERC staff's Plan requires topsoil segregation in 1) all residential areas, 2) actively cultivated or rotated agricultural lands, 3) pastures and hayfields, and 4) other areas at the landowner's request. In these areas, the FERC staff's Plan requires either full right-of-way or trench and subsoil storage area stripping. ***Northwest has requested a variance from section IV.B.1 of the FERC staff's Plan to allow trenchline only topsoil segregation.*** Segregated topsoil will be stockpiled separately from subsoil in accordance with the FERC staff's Plan.

Northwest requests this variance in order to work over the existing pipelines that will be operating during construction. To ensure the safety and integrity of the existing pipelines, Northwest will spread the trench spoil over the existing pipelines for padding on the working side of the construction right-of-way. In deep soils, Northwest will segregate the top 12 inches of topsoil, and in soils with less than 12 inches of topsoil Northwest will make every effort to segregate the entire topsoil layer. The FERC staff's Procedures address topsoiling in wetlands. In wetland areas the Commission generally requires the top 12 inches over the trenchline to be salvaged, except in areas where standing water or saturated soils are present. Areas where topsoil segregation will occur on each loop are shown on the Environmental Alignment Sheets.

To maintain separation between the topsoil and subsoil layers, Northwest will mow the construction right-of-way before trenching, where necessary, and leave the cut vegetation in place. During soil replacement activities, this layer would serve as a visual barrier to differentiate the topsoil left in place from the excavated subsoil layer (trench spoil) spread over the existing pipelines as padding to protect the pipelines. Where topsoil segregation occurs in wetlands, if the EI determines that the mowed vegetation layer will not be an adequate barrier between the topsoil and the subsoil in wetlands, timber mats or other suitable barriers will be used for segregation. In wetlands, straw will not be considered a suitable barrier. Northwest will provide a visible barrier such as straw or timber mats between segregated topsoil and unsegregated spoil storage areas in actively cultivated or rotated cropland, pastures, hay fields, and other upland areas where the landowner objects to the requested variance.

2.3.1.5 Trenching

The depth of the trench will be sufficient to allow for at least 3 feet of cover on top of the pipe in normal soils, however, the trench depth will be greater in agricultural areas and at stream and road crossings. Crossing depths for roads and railroads will be determined by the managing agency/owner.

2.3.1.6 Pipe Stringing

After trenching is complete, individual joints of pipe will be strung along the right-of-way adjacent to the excavated trench and arranged so they are accessible to construction personnel. A mechanical pipe-bending machine will bend individual joints of pipe to the desired angle at locations where there are significant changes in the natural ground contours or where the pipeline route changes direction.

2.3.1.7 Welding and Coating Pipe

After stringing and bending are complete, the sections will be aligned, welded together, and placed on temporary supports along the edge of the trench. All welds will be visually and radiographically inspected. Line pipe, normally mill-coated or yard-coated prior to stringing, requires a coating at the welded joints. Prior to the final inspection, the entire pipeline coating will be electronically inspected to locate and repair any coating faults or voids.

2.3.1.8 Lowering Pipe and Backfilling

The pipe assembly will be lowered into the trench by side-boom tractors and backhoes. The trench will be backfilled using a backfilling machine or bladed equipment. No foreign substance, including skids, welding rods, containers, brush, trees or refuse of any kind, will be permitted in the backfill.

Trench breakers will be installed at the base of slopes adjacent to wetlands and waterbodies and where needed to avoid draining of wetlands or affecting the original wetland hydrology. It is

likely that Northwest will utilize sandbags or foam for trench breaker construction. Topsoil will not be used to fill the bags. However, Northwest may substitute a trench plug constructed of bentonite at appropriate locations to prevent flow from wetlands or streams into the trench and affecting the original wetland hydrology. The contractor will backfill and stabilize areas as soon as possible.

2.3.1.9 Hydrostatic Testing

After backfilling, the pipeline will be hydrostatically tested in accordance with DOT regulations to ensure that the system is capable of operating at the design pressure. Should a leak or break occur, the line would be repaired and retested until the specifications are achieved. Hydrostatic test water will be discharged in a manner to prevent erosion from scour and to prevent sedimentation of adjacent wetlands or waterbodies. The test water will be discharged into a straw bale structure to dissipate energy, filter the test water and to allow discharge of the water as sheet flow. Northwest will attempt to discharge all hydrostatic test water in upland areas at a significant distance from wetland and waterbodies to ensure that all water infiltrates and does not flow into wetlands or waterbodies.

2.3.1.10 Restoration

After the pipeline is backfilled and tested, disturbed areas will be restored, as nearly as possible, to their original contours. Permanent erosion control measures will be installed as discussed in Section 3.0 of this Plan.

3.0 BEST MANAGEMENT PRACTICES

This Plan will be used by contractors as a primary construction reference for the Capacity Replacement Project. This Plan provides site-specific directions for installing temporary and permanent erosion control measures or BMPs to prevent or minimize erosion. Attachment A provides drawings of typical BMPs that may be used during construction. BMP materials will be stored at the designated contractor yards for each of the loops.

Northwest will employ one EI for each of the four loops. The EI will be on site during active construction and will have peer status with all other activity inspectors. The EI will have authority to stop activities that violate the measures set forth in this Plan as well as other authorizations and will have the authority to order corrective action. At a minimum, the EI will be responsible for:

- Ensuring compliance with the measures set forth in this Plan, the requirements of the FERC staff's Plan and Procedures, and all other environmental permits and approvals, as well as environmental requirements in landowner agreements;
- Identifying, documenting, and overseeing corrective actions, as necessary to bring an activity back into compliance;
- Verifying that the limits of authorized construction work areas and locations of access roads are properly marked before clearing;
- Verifying the location of signs and highly visible flagging marking the boundaries of sensitive resource areas, waterbodies, wetlands, or areas with special requirements along the construction work area;
- Identifying erosion/sediment control and stabilization needs in all areas;

- Locating dewatering structures and slope breakers to ensure they will not direct water into known cultural resources sites or locations of sensitive species;

- Verifying that trench dewatering activities are located such that water is allowed to infiltrate whenever possible, turbid water does not reach a waters of the state, and dewatering does not result in the deposition of sand, silt, and/or sediment. If such deposition is occurring, the dewatering activity shall be stopped and corrective action taken to prevent reoccurrence;

- Testing subsoil and topsoil in agricultural and residential areas to measure compaction and determine the need for corrective action;

- Advising the Chief Inspector when conditions (such as wet weather) make it advisable to restrict construction activities to avoid excessive rutting;

- Ensuring restoration of contours and topsoil;

- Approving imported soils for use in agricultural and residential areas and verifying that the soil is certified free of noxious weeds and soil pests;

- Determine the need for and ensuring that erosion controls are properly installed, as necessary, to prevent sediment flow into wetlands, waterbodies, sensitive areas and onto roads. This would include evaluating controls prior to a predicted storm event whenever possible and installing additional measures as needed to control storm water and sediment;

- Inspecting and ensuring the maintenance of temporary erosion control measures at least daily in areas of active construction or equipment operation, on a weekly basis in areas with no construction or equipment operation and within 24 hours of each 0.5 inch or greater of rainfall. Inspections should be recorded and records maintained for review upon request.

- Ensuring the repair of all ineffective temporary erosion control measures as soon as possible but not longer than 24 hours of identification;

- Keeping records of compliance with conditions of all environmental permits and approvals (including the measures set forth in this Plan) during active construction and restoration; and

- Identifying areas that should be given special attention to ensure stabilization and restoration after the construction phase.

In addition to these responsibilities, which are required by the FERC staff's Plan, the EI will have additional responsibilities as recommended by the FERC staff in the draft Environmental Impact Statement. The EI's additional responsibilities will include:

- Implementing a soil sampling protocol when contaminated soils are discovered, including conducting soil samples and preparing samples for laboratory analysis or being responsible for overseeing specialists to conduct the samples and prepare them for analysis;

- Determining the adequacy of topsoil and segregation methods in wetlands; and

- Notifying Northwest's Lead Environmental Specialist, Tim Powell, when permit violations occur and when permit requirements need to be altered due to field conditions. Northwest's

Lead Environmental Specialist will notify the agencies and negotiate any necessary changes.

Northwest's Lead Environmental Specialist, Tim Powell, will provide an "Environmental Agency Complaint Line" to the agencies and will also provide the credentials of the EIs to the appropriate state agencies.

3.1 Temporary Erosion Control Procedures

Temporary erosion controls will be installed immediately after initial disturbance (clearing) and will be properly maintained throughout construction and reinstalled as necessary until replaced by permanent erosion controls or restoration is complete. Near waterbodies and wetlands, it will be determined in the field by the EI if it is necessary to install temporary erosion control measures (i.e., sediment barriers) prior to initial disturbance to minimize the potential for sediment to enter a wetland or waterbody.

3.1.1 Construction Ingress and Egress

Northwest has identified ingress/egress points to the construction right-of-way using existing public and private roads that are crossed by the right-of-way. These ingress/egress points are shown on the Environmental Alignment Sheets. To the extent that Northwest can control landowner use of the right-of-way, access will be limited to those vehicles necessary for construction. Traffic will move along the construction right-of-way within the construction right-of-way.

In designated areas, as determined by the EI, Northwest will install construction entrances at right-of-way access points that intersect paved roads to reduce sediment transport onto the roadway. A typical drawing of a construction entrance access pad is provided as Drawing 1408.34-X-0001 in Attachment A.

3.1.2 Sediment Barriers

Sediment barriers will be used to confine sediment to the construction right-of-way and will be constructed of either silt fence or straw bales (see Drawing 1408.34-X-0002 in Attachment A). Generally, silt fence will be used where sediment barriers are required parallel to the right-of-way. Straw bales will generally be used in locations where sediment barriers are required to cross the construction right-of-way along the travel lane such as at waterbody and wetland crossings. These structures would generally be placed as follows:

- at the base of slopes adjacent to road, wetland and waterbody crossings where sediment could flow from the construction right-of-way onto the road surface or into the wetland or waterbody;
- adjacent to wetland and waterbody crossings, as necessary, to prevent sediment flow in the wetland consistent with the requirements of the FERC staff's Procedures; and
- on the down slope side of the right-of-way where it traverses steep side slopes.

Drawing 1408.34-X-0003 in Attachment A shows the placement of temporary sediment barriers adjacent to road crossings. An example of sediment control in ditches and swales is shown on Drawing 1408.34-X-0004 in Attachment A. Examples of sediment barrier installations during construction at wetlands and streams are shown on Drawings 1408.34-X-0005, 0006 and 0007

in Attachment A. The straw bales utilized for sediment barriers will be clean straw that does not contain noxious weeds or other undesirable species that could interfere with the existing land use. Northwest's EI will determine where it may be necessary to provide added protection at these locations as well as at other areas along the construction right-of-way to ensure that runoff is properly treated and that sediment is properly contained on the right-of-way.

The EI will inspect temporary erosion control structures at least on a daily basis in areas of active construction and equipment operation. In areas where active construction and equipment operation are not occurring, inspections will be made at least weekly. All structures will be inspected by the EI within 24 hours of 0.5 inch or greater of rainfall; however, state and other local jurisdictions may require more frequent inspection of erosion control structures. The EI will be responsible for ensuring that ineffective temporary erosion control measures are repaired as soon as possible but no more than 24 hours of discovery. Whenever possible, the EI will inspect erosion control measures in advance of predicted storm events and take preventative measures to minimize the potential for off right-of-way sedimentation.

Temporary sediment barriers will be maintained in place until permanent revegetation measures are successful or until the upland areas adjacent to wetlands, waterbodies or roads are stabilized. The structures will be removed once the area has been successfully restored.

3.1.3 Temporary Slope Breakers

Northwest will install temporary slope breakers to reduce runoff velocity, concentrated flow and to divert water off the construction right-of-way to avoid excessive erosion (see Drawing 1408.34-X-0008 in Attachment A). Temporary slope breakers may be constructed of materials such as soil, silt fence, staked straw bales, or sand bags. The outfall of each temporary slope breaker will be to a stable, well-vegetated area or to an energy-dissipating device at the end of the slope breaker and off the construction right-of-way. The outfall of the slope breakers will be positioned to avoid sedimentation of wetlands, waterbodies and other sensitive areas. Northwest has consulted with the appropriate county NRCS office as well as the WDNR regarding spacing of temporary and permanent slope breakers. While the NRCS provided recommendations for the spacing of permanent slope breakers, they deferred to the spacing provided in the FERC staff's Plan for temporary slope breakers. Therefore, Northwest will install temporary slope breakers on all slopes greater than 5 percent at the following spacing, unless the EI determines that a closer spacing is necessary.

Slope Percent	Spacing (feet)
0-5	None Required
>5-15	300
>15-30	200
>30	100

3.1.4 Mulch

If it becomes necessary to delay final cleanup, including final grading and installation of permanent erosion control measures, beyond 20 days (10 days in residential areas) after the trench is backfilled in a specific area, Northwest will apply mulch on all disturbed slopes before seeding. Mulch will also be applied if construction and restoration activities are interrupted for extended periods. In these areas mulch will be applied uniformly over the area to cover the ground surface at a rate of 2 tons/acre of straw or hay or its equivalent. In addition, the mulch application rate will also be increased to 3 tons/acre on all slopes within 100 feet of waterbodies and wetlands. The mulch will consist of weed free straw or wood fiber hydromulch.

3.1.5 Erosion Control Fabric

Northwest will install erosion control fabric (such as jute or excelsior) on streambanks at the time of recontouring (see Drawing 1408.34-X-0009 in Attachment A). The fabric will be anchored using staples or other appropriate devices. The erosion control fabric to be used on streambanks and steep slopes will be designed for the proposed use and will be approved by the EI.

3.1.6 Dust Control

Wind erosion is generally not a hazard in the project area because soils are wet and not susceptible to blowing during the winter when relatively strong winds are the most prevalent. During summer construction in the project area, fugitive dust may be a potential impact along the construction right-of-way and especially where construction occurs in residential areas. To control dust the EI will direct watering if necessary. Watering trucks will spray only enough water to control the dust or to reach the optimum moisture content of the soil for compaction. Run-off should not be generated during this operation. Dust will be controlled on paved roadways by sweeping (either by machine or hand). During sweeping the EI will determine if water needs to be sprayed to control dust. Any sediment generated from sweeping will be disposed of properly. Water for dust control will be obtained from a municipal source.

3.1.7 Waterbody Crossings

Waterbody crossings will generally be completed using flume and other standard construction techniques (see Drawing 1408.34-0007 and 0006 in Attachment A) consistent with the requirements of federal, state and local agencies with specific authority and expertise to regulate impacts from the project.

Waterbody crossings will be made nearly perpendicular to the axis of the waterbody channel, when feasible, within the existing pipeline right-of-way. The loops typically have not been routed within 15 feet or less parallel to any waterbody, unless the alignment of the existing pipeline previously paralleled a waterbody. In most cases, Northwest has also been successful in designing each crossing such that temporary extra workspaces are not closer than 50 feet from waterbody boundaries, except where the adjacent upland consists of actively cultivated or rotated cropland or other disturbed land.

Northwest will utilize temporary construction bridges during all phase of construction to cross waterbodies. These structures will be designed according to the FERC staff's Procedures as well as according to conditions required by the U.S. Army Corps of Engineers and WDFW Hydraulic Project Approvals. The temporary equipment bridges will be constructed to maintain unrestricted flow and to prevent soil from entering the waterbody. Soil will not be used to stabilize equipment bridges. Bridges will be designed to withstand and pass the highest flow expected to occur while the bridge is in place, and where feasible, bridges will be designed to span the entire ordinary high water mark (OHWM) of the waterbody. If it is not possible to span the OHWM with the bridge, a temporary pier may be required. The temporary bridges may include:

- equipment mats and culvert(s);
- equipment mats or railroad car bridges without culverts;
- clean rock fill and culvert(s); and
- flexi-float or portable bridges.

Northwest may utilize other alternatives for equipment bridges that achieve the same performance and objective. Drawing 1408.34-X-0010 in Attachment A provides a typical drawing of a temporary crossing bridge. The bridge would be removed as soon as possible after permanent seeding. If there will be more than 1 month between final cleanup and the beginning of permanent seeding and reasonable alternative access to the right-of-way is available, equipment bridges will be removed as soon as possible after final cleanup.

Sediment barriers will be installed immediately after initial disturbance of the waterbody or adjacent upland. Sediment barriers will be properly maintained throughout construction and reinstalled as necessary (such as after backfilling of the trench) until replaced by permanent erosion controls or restoration of adjacent upland areas is complete and revegetation has stabilized the disturbed areas.

3.1.8 Wetland Crossings

All wetlands will be crossed in accordance with the FERC staff's Procedures. Drawing 1408.34-X-0005 in Attachment A shows the typical wetland crossing methods that would be utilized during construction. Wetlands crossed by or in close proximity to the loops are shown on the Environmental Alignment Sheets.

Sediment barriers will be installed immediately after initial disturbance (clearing) of the wetland or adjacent upland. Sediment barriers will be properly maintained throughout construction and reinstalled as necessary (such as after backfilling of the trench). Where necessary, sediment barriers will be installed across the entire construction right-of-way immediately upslope of the wetland boundary to prevent sediment flow into the wetland. Where wetlands are adjacent to the construction right-of-way, sediment barriers will be installed along the edge of the construction–right-of-way, as necessary, to prevent sediment flow into the wetland. These sediment barriers will be removed after restoration is complete and revegetation has stabilized the disturbed areas.

In most cases, temporary extra workspaces have been located at least 50 feet away from wetland boundaries. At the HDDs, rollers will be installed at the pullback where necessary to elevate the pipe string above the wetland to minimize disturbance.

In wetlands, where standing water or saturated soils are present, or if construction equipment causes ruts or mixing of the topsoil and subsoil in wetlands, Northwest will use low-ground-weight construction equipment or will operate normal equipment on timber riprap or standard prefabricated equipment mats utilized on current projects. Equipment mats are comprised of wood and serve to distribute the weight of equipment. Rocks, soil imported from outside the wetland, tree stumps, or brush riprap will not be used to support equipment on the construction right-of-way. If trees are utilized as timber riprap or equipment mats to support equipment in saturated areas on the right-of-way, they will be obtained from clearing operations and will not be cut outside of the approved construction work areas. Where timber riprap is used, Northwest will attempt to use no more than two layers of riprap to support equipment on the construction right-of-way. All materials utilized to support equipment on the construction right-of-way will be removed after construction.

The duration of construction-related disturbance within wetlands will be minimized and construction equipment operating in wetland areas limited to that needed to clear the right-of-way, dig the trench, fabricate and install the pipe, backfill the trench and restore the right-of-way. All other construction equipment will use access roads located in upland areas to the maximum extent practicable. Where access roads in upland areas do not provide reasonable access,

Northwest will limit all other construction equipment to one pass through the wetland using the right-of-way unless a variance has been received from the Commission.

3.1.9 Spill Prevention and Equipment Fueling and Maintenance

Northwest has developed a Spill Prevention, Containment, and Countermeasures (SPCC) Plan that describes measures to prevent and control any inadvertent spill of hazardous materials such as fuels, lubricants and solvents that could contaminate soils and affect water quality. The SPCC Plan will be updated with site-specific information prior to construction. All project employees will receive SPCC training.

Equipment fueling and storage of oil, fuel or other materials near waterbodies or wetlands could create a soil contamination and water quality impact if a spill were to occur. Leaks from equipment and vehicles could also cause impacts to surface waters. Vehicle fueling and maintenance and equipment storage will take place along the entire construction right-of-way. However, certain areas are restricted from these activities. Hazardous materials, chemicals, fuels and lubricating oils will be stored in upland areas at least 100 feet from waterbodies and wetlands or in accordance with the FERC staff's Procedures. Restricted areas for storage of these materials will be clearly marked in the field. Concrete coating, refueling and equipment maintenance activities will also be conducted according to the FERC staff's Procedures. Concrete trucks will not be washed on the right-of-way. All hazardous materials will be handled in accordance with the SPCC Plan. If any unanticipated spill occurs during construction, Northwest will implement the procedures outlined in the SPCC Plan.

3.1.10 Material Delivery and Storage

Northwest will use various pipe storage and contractor yards for material delivery and storage. Materials will be brought onto the right-of-way as they are needed and will be located away from waterbodies and wetlands. Secondary containment will be provided for liquids.

3.2 Permanent Erosion Control Measures

Permanent erosion control measures that will be used to reduce pollutants in stormwater discharges will be implemented after all construction phases have been completed. Post-construction BMPs consist of permanent features and operational practices designed to minimize pollutant discharges, including sediments from the site after the project is complete.

3.2.1 Trench Breakers

Where the pipeline trench may drain a wetland, trench breakers will be installed and/or the trench bottom sealed as necessary to maintain the original wetland hydrology. Northwest will install a trench breaker at the base of slopes near the wetland boundary between the wetland and adjacent upland area. A permanent slope breaker and a trench breaker will be installed at the base of slopes near the boundary between the wetland and adjacent upland areas. The trench breaker will be installed immediately upslope of the slope breaker (see Drawing 1408.34-X-0011 in Attachment A).

Trench breakers will generally be spaced according to the following spacing, unless directed by the EI or authorized company representative.

Slope Percent	Spacing (feet)
10 -15	500
15-20	300
20-30	150
>30	100

Trench breakers shall consist of foam or approved sacks filled with a minimum 0.6 cubic feet of sand. They shall be keyed into the trench sidewall where determined necessary by the EI or authorized company representative.

3.2.2 Permanent Slope Breakers

As required by the FERC staff's Plan, slope breakers (water bars) will be installed with a 2 to 8 percent outslope, and flow will be diverted to a stable area. If a stable area is not present, a temporary energy-dissipating device will be installed at the end of the breaker.

The frequency of slope breakers will be based on WDNR Forest Practice Guidelines, which depend on several factors such as slope, surface materials, elevation, expected waterfall, opportunity to install the slope breakers based on the right-of-way configuration and topography, as well as experience. As a general rule, the WDNR recommends installation of slope breakers for every 20-foot rise or vertical fall in elevation or every 400 feet whichever is closer. The EI may modify the spacing based on site-specific characteristics and factors specified in the WDNR Forest Practices Act. The permanent slope breakers will be installed in all areas except agricultural fields, hayfields, pastures and lawns. A typical design of a slope breaker is provided in Attachment A as Drawing 1408.34-X-0008.

3.2.3 Soil Compaction

Northwest will test for soil compaction in agricultural (e.g., active croplands, pastures, nurseries, orchards and vineyards) and residential areas. Tests will be conducted on the same soil type under similar moisture conditions as specified in Section V.C. 1 of the FERC staff's Plan. Pursuant to Section II.B.8 of the FERC staff's Plan, the EI will be responsible for conducting subsoil and topsoil compaction testing and determining corrective measures. Compaction will be relieved in residential areas based on site-specific conditions.

3.2.4 Revegetation

Revegetation will be performed as outlined in Section 7.0 of this Plan.

4.0 MAINTENANCE AND PERIODIC EVALUATION

Erosion control structures will be maintained in accordance with the FERC staff's Plan. The EI will inspect temporary erosion control structures at least daily in areas of active construction. In areas where active construction is not occurring, inspections will be made at least weekly. All structures will be inspected by the EI within 24 hours of 0.5 inch or greater of rainfall or as required by state and local jurisdictions. Whenever possible, the EI should evaluate erosion control measures prior to a predicted storm event and implement measures needed to prevent off right-of-way sedimentation. Inspections should be documented and available for agency review upon request.

The EI will be responsible for ensuring that ineffective temporary erosion control measures are repaired within 24 hours of discovery. The EI will notify project construction crews when poor weather conditions prevail and when to initiate adequate precautionary measures. The EI will ensure that the contractor has adequate equipment, materials and crews available to respond

rapidly to storm events. It is the responsibility of the EI to advise the Chief Inspector when wet weather or other conditions make it advisable to restrict construction activities to avoid excessive rutting in sensitive areas.

5.0 HYDROSTATIC TEST WATER AND DEWATERING

5.1 Hydrostatic Testing

After backfilling, the pipeline will be hydrostatically tested in accordance with DOT regulations to ensure that the pipeline is capable of operating at design pressure. Each HDD will also require pre-installation and post-installation hydrostatic testing. Should a leak or break occur, the pipeline would be repaired and retested until the specifications are achieved. All hydrostatic test water will be obtained from municipal sources and will not be withdrawn from surface waters, unless approvals are granted by the Washington State Department of Ecology (WDOE) and the WDFW.

5.2 Dewatering

During construction there is the potential, in areas of high groundwater, that trench dewatering may be required. Generally, these areas are associated with floodplains and wetlands. However, the construction schedule will generally coincide with the period when the soils in these areas are dry.

5.3 Water Discharge

No hydrostatic test water or water from trench dewatering will be discharged directly to waterbodies. The water discharge from these activities will be directed to a straw bale dewatering structure to dissipate energy to prevent erosion and to filter the discharge in order to avoid sedimentation (see Drawing 1408.34-X-0012 in Attachment A). The discharge will occur to an appropriate sized dewatering structure based on the expected quantity of water to be discharged. Proposed hydrostatic test water discharge locations are provided on the Environmental Alignment Sheets. All discharge locations are in upland areas, and at an appropriate distance from wetlands and waterbodies to promote infiltration and to ensure that sedimentation of wetlands, waterbodies or other sensitive areas does not occur. Northwest's EI will visually monitor the release of hydrostatic test water and trench dewatering activities to ensure that no erosion or sedimentation occurs. In addition, the EI will ensure that turbid water is not discharged to a waters of the state. If the EI determines that a discharge is occurring, the receiving water will be visually monitored for turbidity. If turbidity is observed the dewatering operations would be immediately adjusted/reinstalled/maintained to ensure that the discharge to surface water is stopped and water quality standards are not exceeded.

6.0 NON-STORMWATER DISCHARGES

The main non-stormwater discharge associated with construction of the pipeline is trench dewatering and hydrostatic test water discharge. All water associated with trench dewatering will be pumped to a discharge structure similar to Drawing 1408.34-X-0013 in Attachment A but will be appropriately sized for the discharge volume. Water associated with trench dewatering and hydrostatic testing will not be directly discharged to waterbodies.

7.0 RESTORATION AND REVEGETATION

Initial reclamation of the disturbed areas will begin as soon as possible after construction. Open cut crossings and waterbodies will be stabilized and temporary sediment barriers will be installed within 24 hours in accordance with the FERC staff's Procedures (Section V.C.2). Final grading and permanent erosion control measures will be completed within 20 days (10 days in residential areas) after the trench is backfilled, weather and soil conditions permitting. During final clean-up and initial reclamation, permanent repairs of fences, gates, drainage ditches and other structures removed or damaged during construction will be completed. Drain tiles will be repaired before backfilling. All drain tiles crossed by the loops will be probed to check for damage. Cut or damaged drain tiles will be repaired to their original condition. Northwest will use a qualified specialist to test tiles for damage and to conduct any necessary repairs. Repairs of damaged drain tiles in wetland areas will be limited to replacement of the original size and depth. Approval from appropriate regulatory agencies will be obtained before any expansion of drain tile systems in wetland areas is conducted. Filter-covered drain tiles will not be used during repairs unless the local soil conservation authorities and the landowner approve its use. All repairs will restore the drain tiles to the same condition that existed before construction.

Northwest will work with individual landowners to address restoration of active agricultural areas such as croplands, orchards, nurseries and vineyards as well as residential lawns, ornamental shrubs, gardens and other landscaping. In active agricultural areas, Northwest will encourage the landowner to complete final restoration efforts in these areas and will compensate the landowner for these efforts. In residential areas, Northwest will utilize contractors familiar with local horticultural and lawn establishment procedures for reclamation work or will compensate the landowner to restore these areas. In residential areas, specific reclamation procedures will be determined during negotiations with individual landowners.

7.1 Recontouring

All graded areas associated with pipeline construction will be regraded and contoured to blend into the surrounding landscape and to reestablish natural drainage patterns. Emphasis during recontouring will be to return the entire right-of-way to its approximate original contour, to stabilize slopes, control surface drainage and to provide a more aesthetic appearance. Ruts and other scars will be filled and all drainage ditches will be returned to their preconstruction condition. Recontouring to the original grade in disturbed wetlands is especially critical so that the wetland hydrology is not altered. Existing culverts that are damaged or removed during construction would be replaced to the original or better condition. No other culverts will be installed except those permitted by the appropriate federal, state and local agencies.

7.2 Construction Debris Disposal

During final cleanup, all construction debris (e.g., timber, slash, mats, garbage, drilling fluids, excess rock, etc.) will be cleared from the right-of-way and disposed of in accordance with state and local regulations. Non-merchantable logs/stumps maybe utilized along the construction right-of-way, within the certified construction limits, as off-road vehicle barriers or scattered/piled on the right-of-way as wildlife habitat, where approved by the EI or Northwest's authorized representative and the landowner. Chips from clearing operations may be composted within upland areas of the project's construction right-of-way, where approved by the EI or Northwest's authorized representative.

If composting of chips occurs, Northwest will utilize the recommendations provided by the NRCS (2004a and 2004b) to ensure that the chips do not hinder restoration efforts. Where wood chips are composted within the certificated construction limits, Northwest will scatter the chips across the right-of-way so that they cover no more than 50 percent of the ground surface. According to the NRCS (2004a) this covered rate will allow light and air to penetrate the soil and allow seed to germinate and grow. In addition, as recommended by the NRCS (2004b) additional nitrogen fertilizer will be applied to ensure the C:N ratio is adjusted to approximately 15:1. As generally noted by the Soil Construction Service (1974), when the C:N ratio is higher than 30:1, bacteria decomposing a waste product will use nitrogen from the soil and compete with plants. To determine appropriate fertilizer rates in these areas based on the C:N ratio it will be necessary to take representative soil samples at regular intervals and send them to a soil testing laboratory. The laboratory will conduct the appropriate tests and provide a fertilizer recommendation. Lists of soil testing labs are provided in Attachment B.

The laboratory should be fully aware of the purpose of the test and that a fertilizer recommendation is required. The EI will be responsible for collecting the representative soil samples (based on the number of composting areas), sending the samples to the lab and documenting the sampling locations, test results and fertilizer recommendations. The EI will also ensure that the recommended fertilizer rates are applied in the appropriate locations. In areas where soil testing is conducted and fertilizer recommendations are provided, these recommendations will be in lieu of the general fertilizer applications rates that are specified in Sections 7.8 below.

7.3 Soil Compaction

Northwest will test for soil compaction in residential areas, agricultural areas (e.g., active croplands, pastures, nurseries, orchards and vineyards) and residential areas. Tests will be conducted on the same soil type under similar moisture conditions as specified in Section V.C.1. of the FERC staff's Plan. Pursuant to the FERC staff's Plan, the EI will be responsible for conducting subsoil and topsoil compaction testing and determining corrective measures. Compaction will be relieved in residential areas based on site-specific conditions.

7.4 Scarification

Prior to respreading the topsoil, the right-of-way will be scarified (where necessary as determined by the EI) by ripping or chiseling to loosen compacted areas from equipment traffic. Scarifying the subsoil will also promote water infiltration and improve better soil aeration and root penetration.

Where compaction is evident and deemed necessary, scarification will occur in disturbed areas, including the passing lane or temporary extra workspace, even if these areas were only scalped of vegetation or driven over. Scarification will be at least 12 inches deep with rippers spaced not more than 16 inches apart. Ripping and chisel plowing will also occur when materials are dry to promote the shattering of compacted layers.

In wetlands, scarification is not anticipated because traffic will be limited in these areas to that needed to clear the right-of-way, dig the trench, fabricate and install the pipeline, backfill the trench and restore the right-of-way. All other equipment will be limited to one pass through the wetland using the right-of-way. Equipment mats will be utilized in wetlands where soils are saturated where standing water is present to further minimize compaction. The need for

scarification in wetland areas will be determined by the EI. Scarification will not be conducted in wetlands where it may adversely affect the wetland hydrology.

7.5 Soil Replacement

All topsoil salvaged will be uniformly spread over the portions of the right-of-way from where the soil was salvaged. If compaction occurs during this operation that might not be relieved during seedbed preparation, all compacted areas will be scarified. Topsoil spreading will not occur during wet periods when soils are easily compacted and all travel over retopsoiled areas will be restricted. The EI will be responsible for ensuring that topsoil imported into residential areas for replacement is free of noxious weeds or other deleterious materials.

7.6 Rock Removal

The FERC staff's Plan requires the removal of excess rock the top 12 inches of soil to the extent practicable in all rotated and permanent croplands, hayfields, pastures, residential areas and other areas at the landowner's request. In these areas, Northwest will clean up excess rock to a condition similar to adjacent portions of the construction right-of-way (e.g., size, density, and distribution of rock) unless the landowner and Northwest negotiate for other requirements. The rock collected from these operations will either be hauled to an approved landfill or commercial quarry or will be disposed of in upland areas within the certified construction limits, with approval of the landowner. The use of alternate disposal locations will be approved by the Commission.

7.7 Seedbed Preparation

Seedbed preparation will be conducted immediately prior to seeding to prepare a firm seedbed conducive to proper seed placement and moisture retention. Seedbed preparation will also be performed to break up surface crusts and to eliminate weeds that may have developed between initial reclamation and seeding.

A seedbed will be prepared in disturbed areas, where necessary, to a depth of 3 to 4 inches using appropriate equipment to provide a seedbed that is firm, yet rough. A rough seedbed is conducive to capturing or lodging seed when broadcasted or hydroseeded, and it reduces runoff and erosion potential. The rough seedbed will retain soil moisture for seedling germination and establishment.

In most areas, final right-of-way cleanup procedures should be sufficient because it leaves a surface smooth enough to accommodate a drill seeder pulled by a farm tractor and rough enough to catch broadcasted seed and trap moisture and runoff. However, additional preparation such as chisel plowing or disking may be necessary to prepare an adequate seedbed. Where residential lawns or landscaped areas are disturbed, more intensive ground and seedbed preparations may be required including rock collection, grading and soil preparation/amending.

7.8 Fertilization

Based on the NRCS (2004b) and WDNR (2004) recommended fertilization rates, Northwest will use a standard fertilization rate of 200 pounds per acre bulk triple-16 fertilizer (16:16:16 - nitrogen, potassium and phosphorus) on all disturbed areas to be reseeded, except in wetlands. This fertilization rate will apply 32 pounds per acre of elemental nitrogen, potassium and phosphorus. It will not be applied in those areas described in Section 7.2 above where wood

chips would be composted on the right-of-way. A site-specific fertilization rate, based on soil testing will be applied in those areas. Where fertilizer is applied by broadcast methods, the fertilizer will be incorporated into the top 2 inches of soil. Where the fertilizer is applied by hydroseeding, the fertilizer will be applied with the hydroseeding slurry. The NRCS did not recommend the addition of lime or other soil pH modifiers.

7.9 Seed Mixtures and Supplemental Plantings

As required by the FERC staff's Plan, Northwest has consulted with the NRCS regarding recommended seed mixtures for the project area. The NRCS (Seed Mixtures 1 – 4) and the WDOE (Seed Mixture 3a) recommended seed mixtures are listed below in Table 1 and are based on the specific vegetation/land use types that are to be reseeded. The NRCS seed mixtures are based on bulk seeding rates and are not based on Pure Live Seed (PLS). All seed will be tested within 12 months of use. The seed will be free of noxious weeds and the quantity of total weed seed will be low. The EI will review all seed tags prior to use to ensure that these procedures are implemented. The NRCS recommended seeding rates specified in Seed Mixtures 1, 2, 3 and 4 are based on broadcast seeding methods. If hydroseeding occurs, the broadcast seeding rate will be used plus any adjustment the hydroseeding company recommends based on their equipment specifications. If drill seeding is conducted, the seeding rate can be divided in half.

Table 2 provides an upland erosion control seed mixture that was recommended by the WDNR (2004) for lands managed by WDNR (MPs 1427.40 to1427.2 and 1409.28 to 1408.77) on the Mount Vernon Loop. WDNR did not provide a recommendation for a wetland seed mixture and stated that the NRCS recommended seed mixtures for these sites would be appropriate for the areas on WDNR managed lands.

In consultation with the Fort Lewis Military Reservation (Fort Lewis), The Nature Conservancy has developed the following plan for revegetation of the 13th Division Prairie:

- **High Quality Prairie (1,500 linear feet).** Direct seed a base of Roemer's fescue, which is the dominant native bunchgrass in the northwest coastal prairies. A seed drill would be used to increase germination and establishment rates and to minimize the amount of seed needed. (Roemer's fescue is generally not commercially available. The Nature Conservancy has two contract growers producing seed.) Supplement the fescue with additional critical forbs, all from local sources. The greatest effort would be placed on growing and planting plugs of forbs, but this would also be supplemented with direct seeding with species that are amenable to that technique. Plugs will be placed at approximate 1 meter spacing, which is 15/linear foot of right-of-way.

- **Lower Quality Prairie (4,000 linear feet).** Direct seed a base of Roemer's fescue. If sufficient and appropriate seed can be obtained of suitable forb species, these will be added to the mix.

- **Floodplain Prairie (300 linear feet).** In these areas Blue Wild Rye is the dominant native species in this habitat. Direct seeding and plugs of this grass will be planted. Priority forbs will also be planted. Spacing of both will be 15/linear foot of right-of-way.

Forested areas crossed on Fort Lewis would be reseeded using Seed Mixture 1 recommended by the NRCS in Table 1, unless Fort Lewis provides other recommendations.

White-topped aster (*Aster curtus*) disturbed during the project will be replaced. Northwest may either salvage individuals, obtain plugs or salvage seeds of the aster and other prairie species for reseeding in high quality prairie areas. Northwest will also salvage topsoil over the trench line in the prairie between MPs 1332.72 and 1331.86 and will replace the topsoil over the trench line after backfilling. The topsoil will contain viable prairie seeds present in the topsoil seedbank, which will enhance restoration efforts in this area.

Although small flowered trillium (*Trillium parvaflora*) is present adjacent to the construction right-of-way, as determined by botanical surveys, no individuals will be disturbed by project activities. Locations of white-top aster and small flowered trillium are shown on the Environmental Alignment Sheets.

On Fort Lewis, Northwest will review the staked construction limits prior to clearing activities to determine if any Oregon white oaks are located within the staked construction limits. If present, Northwest will assess these oaks to determine if they can be avoided. All oaks that can be avoided will be flagged to ensure they are not cut or disturbed by construction activities. If any oaks are disturbed by construction they will be replanted in the temporary construction right-of-way and temporary extra workspaces outside Northwest's permanent easement with containerized planting stock during restoration.

Table 1. Recommended Seed Mixtures

Seed Mixture 1 - Upland Right-of-Way Areas for all Loops		
Perennial Grasses		**lbs/ac**
Bentgrass	*Agrostis spp.*	5
Fescue, Fine or Creeping Red	*Festuca rubra*	10
Fescue, Tall	*Festuca arundinacea*	10
Orchardgrass	*Dactylis glomerata*	7
Ryegrass, Annual or Italian	*Lolium multiflorum*	10
Timothy	*Phleum pratense*	2
Legumes		
Clover, Red	*Trifolium pratense*	4
Clover, White	*Trifolium repens*	4
Trefoil, Birdsfoot	*Lotus corniculatus*	2
Annual Cereal Grains and Legumes		
Oats	*Avena sativa*	20
Total Bulk lb/acre		**74**
Seed Mixture 2 - Pasture and Hayland Mix – Upland Sites for all Loops		
Perennial Grasses		**lbs/ac**
Fescue, Tall	Festuca arundinacea	8
Orchardgrass	*Dactylis glomerate*	25
Ryegrass, Perennial or English	*Lolium perenne*	10
Legumes		
Clover, Red	*Trifolium pratense*	3
Clover, White	*Trifolium repens*	5
Total Bulk lb/acre		**51**
Seed Mixture 3- Pasture and Hayland Mix – Wet Sites for all Loops		
Perennial Grasses		**lbs/ac**
Fescue, Tall	*Festuca arundinacea*	30
Ryegrass, Perennial or English	*Lolium perenne*	20
Legumes		
Clover, Alsike	*Trifolium hybridum*	4
Clover, White	*Trifolium repens*	4
Trefoil, Birdsfoot	*Lotus corniculatus*	2
Total Bulk lb/acre		**60**
Seed Mixture 3a- Seed Mixture for Disturbed Emergent Wetlands for all Loops		
Perennial Grasses		**lbs/ac**
Ryegrass, Annual	*Lolium multiflorum*	20.0
Creeping bentgrass	*Agrostis stolonifera*	0.4
Garrison creeping foxtail	*Alopercurus arundianceus*	3.0
Meadow foxtail	*Alopercurus pratensis*	2.0
Red fescue	*Festuca rubra*	2.0
Hairgrass, Tufted	*Deschampsia caespitosa*	0.5
American sloughgrass [1]	*Beckmannia syzigachne*	2.0
Western Mannagrass	*Glyceria occidentalis*	3.0
Total Bulk lb/acre		**32.9**

Table 1. Recommended Seed Mixtures (concluded)

Seed Mixture 4 - Wetland Seed Mixture for all Loops		
Grasses		**lbs/ac**
Ryegrass, Annual	*Lolium multiflorum*	20
Quick Guard [2]		40
Fescue, Fine or Creeping Red	*Festuca rubra*	5
Hairgrass, Tufted	*Deschampsia caespitosa*	2
Mannagrass, Reed [1]	*Glyceria grandis*	2
Barley, Meadow [1]	*Hordeum Brachyantherum*	5
Foxtail Water [1]	*Aleopecurus geniculatus*	2
Rice Cut-grass[1]	*Leersia oryzoides*	2
Clover, Springbank [1]	*Trifolium wormskjoldii*	2
Total Bulk lb/acre		**80**

[1] These species may be included in the seed mixture if they are readily available from a commercial seed supplier.
[2] Quick Guard is a sterile hybrid of wheat and rye.
[3] Blue wildrye (*Elymus glaucus spp. Glaucus*) to be added to the mixture on Fort Lewis Military Reservation in Wetlands FL-23 and FL 24 at Muck Creek and South Creek at MPs 1332.37 and 1332.11.

Table 2. WDNR Recommended Seed Mixtures

WDNR Erosion Control Mix for all Upland Right-of-Way Areas on the Mount Vernon Loop			
Common Name	**Scientific Name**	**Variety**	**lbs/ac (PLS)**
Creeping Red Fescue	*Festuca rubra*		10
Perennial Ryegrass	*Lolium perenne*	Alf	10
Colonial bentgrass	*Agrostis spp.*	Highland	5
White Dutch clover	*Trifolium pratense*		4
		Total PLS lb/acre	**29**

Note: Where seeding is to occur by hydroseeding, WDNR recommends the following slurry mixture ratios: 50 gallons water; 20 pounds of wood fiber mulch; 4 pounds of fertilizer (16-16-16-3 = Nitrogen: Potassium: Phosphorus: sulfur) and 1 pound of seed mix.

Planting locations of oaks will occur in strategic locations within the construction right-of-way to prevent their removal during operational maintenance. These areas include appropriate planting locations within temporary extra workspaces and the temporary construction right-of-way that are outside Northwest's permanent easement and subject to vegetation clearing during operations. The minimum size of the oak planting stock will either be 5-gallon size containers or 1-inch caliper planting stock whichever is commercially available. Alternate size planting stock may be substituted based on commercial availability at the time of planting.

At the Chehalis Compressor Station, Seed Mixture 3a listed in Table 1 will be utilized.

7.10 Seeding Timing

Disturbed areas will be seeded within 6 working days of final grading, weather and soil conditions permitting. It is expected that seeding of restored right-of-way areas may begin as early as mid-August and will proceed until all areas have been reseeded which may extend to mid November.

7.11 Seeding Methods

Seeding will be conducted using the drill, broadcast and hydroseeding methods according to the guidelines in the FERC staff's Plan. Where broadcast seeding occurs, other than hydroseeding,

the seeded area will be lightly dragged with chains or other appropriate harrows to lightly cover the seed. Fertilizer, lime or mulch will not be used in wetlands. Revegetation of wetland areas will use the seed species recommended by the NRCS and the WDOE (see Seed Mixtures 3, 3a and 4 in Table 1).

7.12 Mulch

Mulch will be applied on all slopes where necessary to stabilize the soil. The mulch will be uniformly applied at a rate of 2 tons/acre to cover at least 75 percent of the ground surface. Mulching will occur during seeding (where hydroseeded) or immediately after seeding where broadcast or drill seeding occurs. All straw utilized for mulch will be weed free. Anchoring the mulch is not expected to be necessary because strong winds, which could dislodge the mulch, typically occur during the winter rainy season when the moist conditions will bind the straw to the soils. Liquid mulch binders are not expected to be utilized unless hydromulch is applied. Liquid binders will not be used in wetlands or waterbodies.

Where excessive chipping is required, ***Northwest requests a variance from Section IV. F.3.e. of the Commission's Upland Plan to allow Northwest to use wood chips as mulch up to 3 tons per acre and adjust the stipulated fertilization rates accordingly.*** A similar variance was requested and approved during installation of the Evergreen Expansion Project. Where wood chips are scattered across the right-of-way during restoration activities, the scattered material would not cover more than 50 percent of the ground surface so as not to hinder revegetation efforts. Where wood chips are spread across the right-of-way, Northwest will increase the amount of nitrogen applied, to maintain a 15:1 carbon to nitrogen ratio, based on laboratory analysis of soil samples taken from the area and recommendations from the testing laboratory. This variance has been approved where the following WDOE conditions are adhered to:

- No invasive plant material will be allowed in the mulch (i.e., Himalayan blackberry or Scot's broom);
- Mulch should be placed no more than 4 inches deep where wood chips are used as surface mulch around woody species installed to restore native woody vegetation in disturbed wetlands or uplands associated with temporary extra workspaces;
- No mulch should be placed in wetlands; and
- The spreading of wood chips over areas that would be seeded to restore grasses and/or emergent vegetation should be limited to the rate recommended by the NRCS, including fertilizer rate recommendations and should meet the first two conditions.

7.13 Grazing Deferments

Northwest will develop grazing deferment plans, where necessary, based on negotiations with individual landowners. Grazing deferment plans may include temporary fencing to keep livestock off of the restored right-of-way, boarding animals at alternate locations, purchasing supplemental feed or other similar methods to minimize potential livestock disturbance to right-of-way revegetation efforts.

7.14 Noxious Weeds

The NRCS (NRCS, 2004b) as well as the noxious weed control boards for Whatcom, Snohomish, King, Pierce and Thurston Counties have been consulted for recommendations to prevent the introduction or spread of noxious weeds and soil pests. The NRCS and weed

control boards recommend that disturbed areas be planted with appropriate seed mixes to prevent noxious weed germination, monitoring of the right-of-way after disturbance for the presence of noxious weeds and control of weeds when they are found. In addition, the following measures have been recommended to ensure that the potential spread of noxious weeds is minimized.

- Inspect equipment prior to transporting to the construction right-of-way to ensure all equipment is clean and free of potential weed seed or sources (i.e., soil roots, or rhizomes). All equipment hauled into the county will be cleaned before entering the county. Inspection of all equipment and trucks used on the project to ensure they are clean will be the responsibility of the EI or Northwest's authorized representative.

- Use certified weed-free straw for mulch and sediment barriers, dewatering structures or other uses along the right-of-way. (Wood chips generated from the project may also be used as mulch along the right-of-way.) The EI or Northwest's authorized representative will be responsible to ensure that all straw hauled to the construction yards for use will be certified weed free. The certification process can be documentation from the straw producer/vender that the straw was produced from certified weed free fields, or the straw can be inspected by the county extension agent to verify the straw is weed free. Depending on the source of the straw it is generally advisable to have the straw certified in the county where it was produced prior to shipping. If no certified weed-free straw is available, Northwest will monitor areas where straw is utilized on the right-of-way to ensure noxious weeds have not established.

- Prior to clearing, areas along each loop will be surveyed for areas that may be infested with priority noxious weeds that are listed on the county's priority noxious weed list. These are weeds listed on the county's current noxious weed list as a Class A Weed. Class A weeds are non-native species that have limited distribution in Washington. In addition, potential noxious weeds species listed on the Class B and C lists that are likely to occur on the construction right-of-way (i.e., such as the various species of Knotweeds) would also be included in the survey. Prior to construction in 2006, Northwest's authorized representative would consult with the local weed control boards to identify the Class A and potential Class B and C listed species that would be included in the survey. The Noxious Weed Control Boards would assist in the identification of the specific Class A, B and C weeds that could have a presence on the construction right-of-way and will assist in providing identification training and may assist in the weed surveys of the right-of-way prior to construction. The current 2005 noxious weed lists are provided on the counties' Noxious Weed Control Boards web sites which can easily be found by searching for the Noxious Weed Control Board of the specific county on the web. (The noxious weed lists are updated annually.) These web sites also provide useful identification materials.

  Preventing new infestations and eradicating existing Class A noxious weed infestations are the highest priority for the state. Eradication is required by state law (RCW 17.10). Preventing new infestations and controlling existing infestations of Class B and selected Class C weeds are also required by state law (RCW 17.10). Infested areas would be cleared in a manner to minimize the transport of weed seed, roots and rhizomes or other vegetative materials and soil from the site down the construction right-of-way.

- In areas where infestations have been identified or noted in the field, the Contractor will clear vegetation and salvage topsoil adjacent to the area from which they are stripped to eliminate the transport of soil-born noxious weed seeds, roots, or rhizomes. During

reclamation, the Contractor will return topsoil and vegetative material from infestation sites to the areas from which they were stripped. Any clearing equipment used in areas of Class A or the priority B and C listed noxious weeds would be cleaned by hand or blown down with air prior to leaving the site. Infested areas would be mapped to ensure that these areas are monitored during operations to ensure that these weeds are controlled and do not spread.

- Where weed control is necessary, Northwest will employ mechanical methods (mowing, discing, etc,) to prevent the spread of these weeds or will employ a licensed contractor to ensure that the appropriate herbicides are utilized for the targeted weed species during the proper phenological period of the targeted weed species and at the specified rate. The contractor will ensure that the herbicides are used according to the labeling restrictions and according to all applicable laws and restrictions. The contractor will confirm that the herbicides are used under the proper seasonal and weather conditions to ensure the herbicides' effectiveness and to minimize drift to non-targeted areas. Herbicides will not be applied during precipitation events or when precipitation is expected within 24 hours or as specified on the label. Herbicides will not be used within 100 feet of a wetland or waterbody, unless allowed by the appropriate agency. Prior to herbicide application, Northwest and or their contractor will obtain all required permits from the local jurisdiction/authorities.

7.15 Maintenance

Northwest will conduct follow-up inspections of all disturbed areas after the first and second growing seasons to determine the success of revegetation. Northwest will monitor crops for at least 2 years to determine the need for additional restoration. Revegetation shall be considered successful in upland areas if upon visual survey the density and cover of non-nuisance vegetation are similar in density and cover to adjacent undisturbed lands. If vegetative cover and density are not similar or there are excessive weeds after two full growing seasons, a professional agronomist shall determine the need for additional restoration measures. Any noxious weeds designated for control or eradication in the various counties under RCW 17.10 will be controlled or eradicated on the construction right-of-way. Northwest will continue revegetation efforts until revegetation is successful. Repair of erosion control structures will occur until the right-of-way has been successfully revegetated and stabilized. Once the site is stabilized, temporary erosion control measures will be removed.

In wetland areas, revegetation will be considered successful if the cover of herbaceous and/or woody species is at least 80 percent of the type, density, and distribution of the vegetation in adjacent wetland areas that were not disturbed by construction. If revegetation is not successful at the end of 3 years, Northwest will develop and implement (in consultation with a professional wetland ecologist) a remedial revegetation plan to actively revegetate the wetland and will continue revegetation efforts until wetland revegetation is successful.

Northwest will monitor and correct problems with drainage and irrigation systems resulting from pipeline construction in active agricultural areas until restoration is deemed successful.

Routine vegetation maintenance clearing shall not be done more frequently than every 3 years. However, to facilitate periodic corrosion and leak surveys, a corridor not exceeding 10 feet in width centered on the pipeline may be maintained annually in a herbaceous state. In no case shall routine vegetation maintenance clearing occur between April 15 and August 1 of any year.

Northwest will not conduct vegetation maintenance over the full width of the permanent right-of-way in wetland and waterbody riparian areas. Where necessary, to facilitate periodic corrosion

and leak surveys, a corridor not exceeding 10 feet in width centered on the pipeline may be maintained annually in an herbaceous state. Vegetation maintenance adjacent to waterbodies will allow a riparian strip at least 50 feet wide, as measured from the waterbody's mean high water mark, to permanently revegetate with native plant species across the entire construction right-of-way.

Northwest will test, operate and maintain the proposed project facilities in accordance with 49 CFR Part 192 and other applicable federal and state regulations. The pipeline right-of-way will be clearly marked where it crosses public roads, railroads, rivers, fenced property lines and other locations as necessary. All pipeline facilities will be marked and identified in accordance with applicable regulations to avoid accidental excavation.

8.0 REFERENCES

Radbruch-Hall, D.H., R.B. Colton, W.E. Davies, B.A. Skipp, I. Lucchitta, and D.J. Varnes. 1976. Preliminary Landslide Overview Map of the Conterminous United States. Miscellaneous Field Studies Map MF-771. USGS, Menlo Park, California.

U.S. Geological Survey. 1997. The Ground-Water System and Ground-Water Quality in Western Snohomish County, Washington. Water Resources Investigations Report 96-4312. Tacoma, Washington.

Williams, R.W., R.M. Laramie, and J.J. Ames. 1975. A Catalog of Washington Streams and Salmon Utilization. Volume 1, Puget Sound Region. Washington Department of Fisheries. Olympia, Washington.

Natural Resources Conservation Service (NRCS), 1994a, Mulch - Technical Guidelines – Code 484

_____, 1994b, Marty Chaney, Agronomist, Olympia Washington, Personnel Communications with PIC Technologies, Inc.

Washington State Department of Natural Resources (WDNR), 2004. Brian Davis, Sedro Woolley, Washington, Personnel Communications with PIC Technologies, Inc.

Soil Conservation Service (SCS), 1974, Wood Bark as a Soil Conditioner Or Mulch. Technical Notes, Plant Materials - 4, John L. Schwendiman, U.S. Department of Agriculture, Spokane Washington.

ATTACHMENT A

BMP TYPICALS

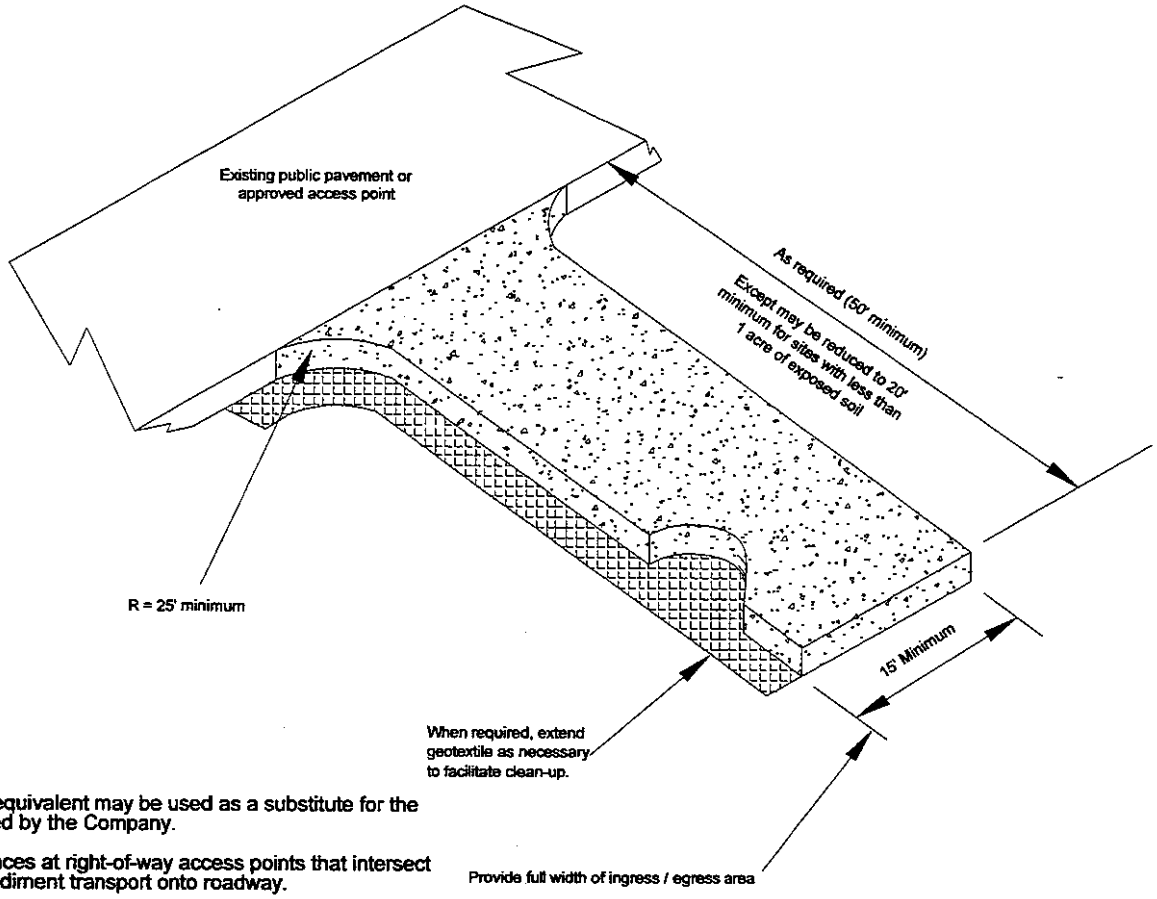

Notes:

Equipment mats or their equivalent may be used as a substitute for the graveled apron if approved by the Company.

stall construction entrances at right-of-way access points that intersect aved roads to reduce sediment transport onto roadway.

Install culverts in road ditches as necessary.

Crushed stone access pads shall be placed on synthetic fabric in residential or active agricultural areas to facilitate stone removal. Use Synthetic Industries style 22TEX, Light Stabilization Fabric, or equivalent (3 oz/yd woven geotextile).

INSTALLATION: The area of the entrance should be cleared of all vegetation, roots and other objectionable material. The gravel shall be placed to the specified dimensions. Any drainage facilities required because of washing should be constructed according to specifications in the plan. If wash racks are used, they should be installed accoriding to manufacturer's specifications.

AGGREGATE: 4" to 6" crushed Ballast Rock.

ENTRANCE DIMENSIONS: The aggregate layer must be at least 12 inches thick. It must extend the full width of the vehicular ingress and egress area. The length of the entrance must be at least 50 feet.

WASHING: If conditions on the site are such that most of the mud is not removed from vehicle tires by contact with the gravel, then the tires must be washed before vehicles enter a public road. Wash water must be carried away from the entrance to a settling area to remove sediment. A wash rack may also be used to make washing more convenient and effective

MAINTENANCE: The entrance shall be maintained in a condition which will prevent tracking or flow of mud onto public rights-of-way. This may require periodic top dressing with 2-inch stone, as conditions demand, and repair and/or clean out any structures used to trap sediment. All materials spilled, dropped, washed or tracked from vehicles onto roadway or into storm drains must be removed immediately.

DRAWING NO.	REFERENCE TITLE

CAPACITY REPLACEMENT PROJECT
NORTHWEST PIPELINE CORPORATION
TYPICAL CONSTRUCTION ENTRANCE ACCESS PAD

Williams. GAS PIPELINE

CE

NO.	DATE	BY	REVISION DESCRIPTION	W.O. NO.	CHK.	APP.	DRAWN BY: PIC	DATE: 1-08-2004	ISSUED FOR BID:	SCALE: NONE
							CHECKED BY:	DATE:	ISSUED FOR CONSTRUCTION:	
							APPROVED BY:	DATE:	DRAWING NUMBER: 1408.34-X-0001	SHEET OF
									%TIME% %PATH%	

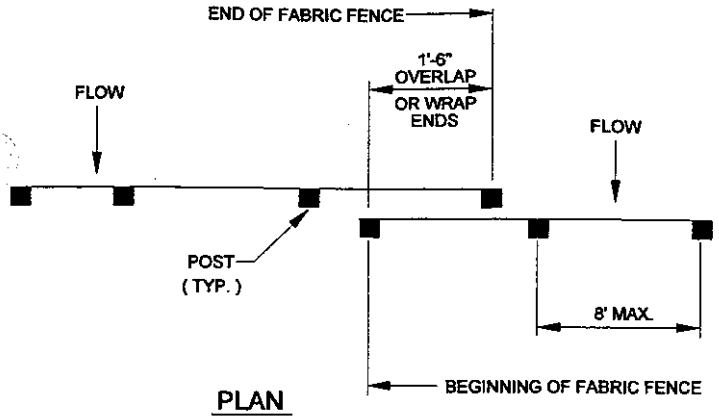

PLAN

FASTENER LOCATION

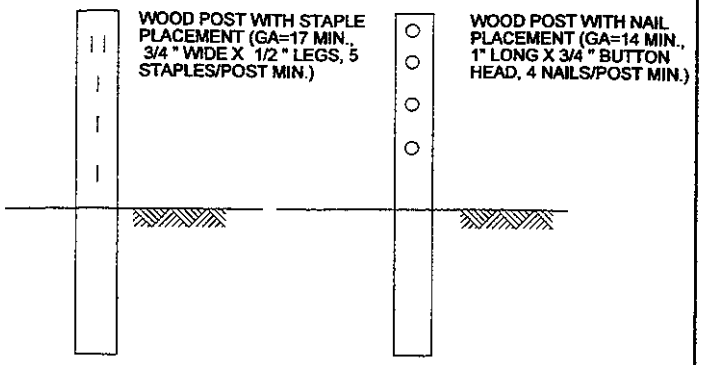

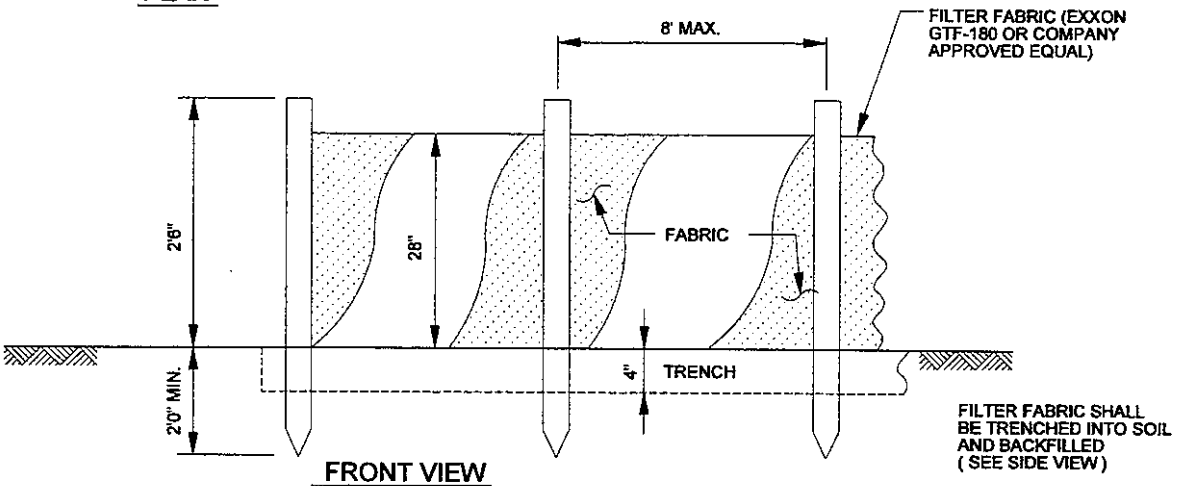

FRONT VIEW

1. INSTALL FILTER FABRIC AFTER REVEGETATION CLEARING AND IMMEDIATELY AFTER SOIL DISTURBANCE:

   - AT APPROPRIATE LOCATIONS TO PREVENT SILTATION INTO WATERBODIES, WETLANDS OR ROADS CROSSED BY THE CONSTRUCTION RIGHT-OF-WAY

   -TO PREVENT STOCKPILED SOIL OR SPOIL FROM LEAVING THE WORK AREA.
2. FILTER FABRIC SHALL BE INSTALLED TO FILTER SEDIMENT FROM SURFACE RUNOFF.
3. INSTALLATIONS SHALL BE PERIODICALLY CHECKED ACCORDING TO FERC'S PLAN AND PROCEDURES, AND IF FLOW IS OBSTRUCTED, BUILD-UP OF SEDIMENT SHALL BE REMOVED.
4. FILTER FABRIC SHALL BE LEFT IN PLACE UNTIL PERMANENT VEGETATIVE COVER IS ESTABLISHED UNLESS REMOVAL IS AUTHORIZED BY COMPANY REPRESENTATIVE.
5. FILTER FABRIC SHALL BE REPLACED WHENEVER IT HAS DETERIORATED TO SUCH AN EXTENT THAT IT REDUCES THE EFFECTIVENESS OF THE FILTER FABRIC.
6. FILTER FABRIC SHALL BE PLACED TO FOLLOW (RUN PARALLEL TO) THE CONTOURS.
7. ON UPSLOPE INSTALLATIONS, BOTH ENDS OF THE FILTER FABRIC SHALL BE TURNED AND EXTENDED UPSLOPE.
8. FILTER FABRIC SHALL BE CONSTRUCTED OF EXXON GTF-180 FABRIC OR A SIMILAR FABRIC WITH A TENSILE STRENGTH AT 20% (MAX.) ELONGATION OF 50 LB./LINEAR INCH OR GREATER.
9. AREA DISTURBED AS A RESULT OF REMOVING THE FILTER FABRIC SHALL BE RESTABILIZED BY SEEDING IN ACCORDANCE WITH THE REVEGETATION PLAN.

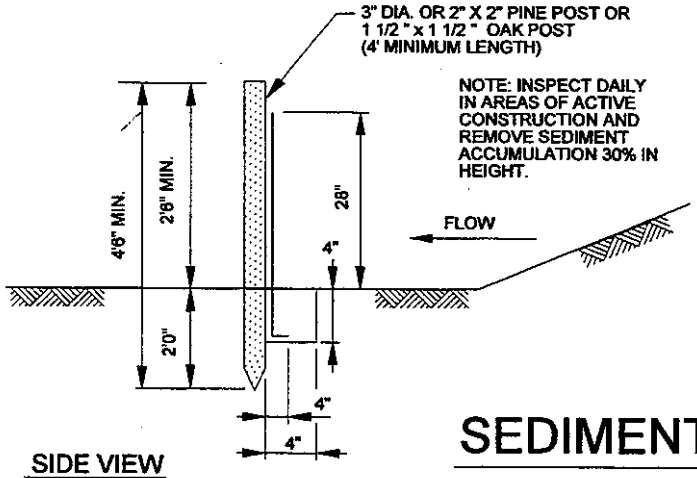

SIDE VIEW

SEDIMENT BARRIER - SILT FENCE OPTION

TEMPORARY EROSION CONTROL MEASURE

DRAWING NO.	REFERENCE TITLE

CAPACITY REPLACEMENT PROJECT
NORTHWEST PIPELINE CORPORATION
TYPICAL
SEDIMENT BARRIER - SILT FENCE
(FILTER FABRIC) OPTION

SB

Williams GAS PIPELINE

NO.	DATE	BY	REVISION DESCRIPTION	W.O. NO.	CHK.	APP.

DRAWN BY: KLL	DATE: 02-02-2001	ISSUED FOR BID:	SCALE: NOT TO SCALE
CHECKED BY:	DATE:	ISSUED FOR CONSTRUCTION:	
APPROVED BY:	DATE:	DRAWING NUMBER: 1408.34-X-0002	SHEET 1 OF 2
		%TIME% %PATH%	

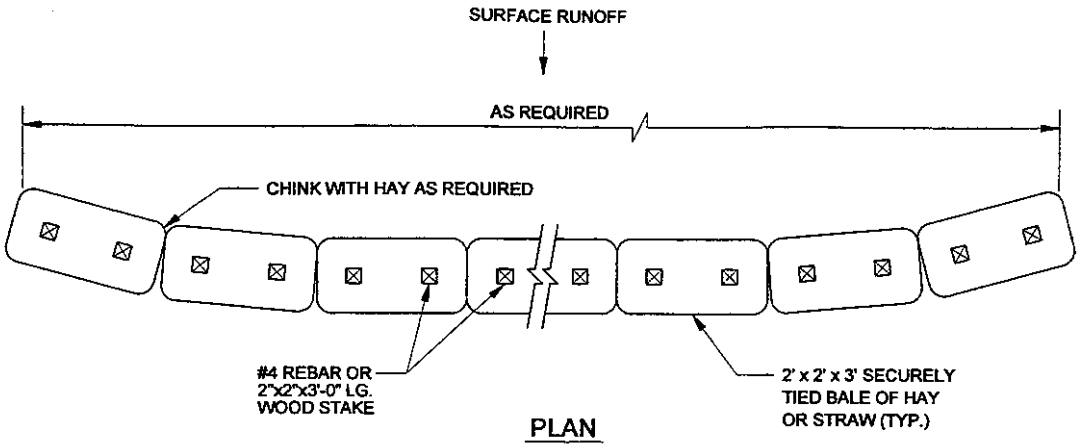

PLAN

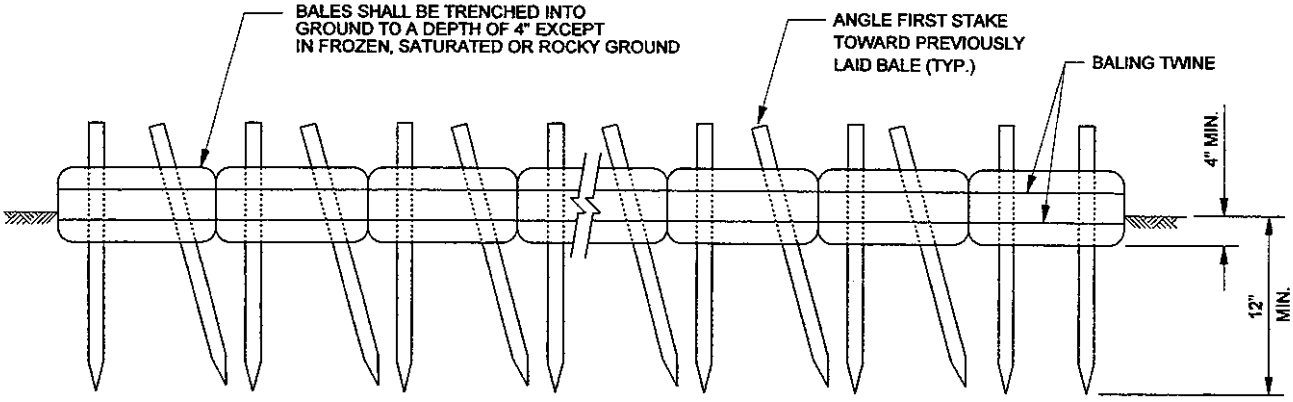

ELEVATION

NOTES:

1. BALE BARRIERS SHALL BE PLACED TO FOLLOW (RUN PARALLEL TO) THE CONTOURS AND SHALL NOT BE LOCATED IN AREAS OF CONCENTRATED FLOW.
2. INSTALLATIONS SHALL BE CHECKED AFTER EACH RAINFALL AND IF FLOW IS OBSTRUCTED, THE SEDIMENT SHALL BE REMOVED
3. BALE BARRIERS SHALL BE LEFT IN PLACE UNTIL PERMANENT VEGETATION COVER IS ESTABLISHED. MATERIAL FROM BALE BARRIERS MAY THEN BE USED AS MULCH AND SCATTERED OVER THE SURROUNDING AREA AS DIRECTED BY COMPANY REPRESENTATIVE.
4. ON UPSLOPE INSTALLATIONS, BOTH ENDS OF THE BALE BARRIER SHALL BE TURNED AND EXTENDED UPSLOPE.
5. AREA DISTURBED AS A RESULT OF REMOVING THE BALE BARRIER SHALL BE RESTABILIZED BY SEEDING ACCORDING TO THE REVEGETATION SPECIFICATIONS.
6. CONTRACTOR SHALL USE CERTIFIED NOXIOUS WEED FREE HAY OR STRAW.
7. BALES SHALL BE PLACED SUCH THAT TIES OR BALING TWINE IS NOT IN CONTACT WITH THE GROUND.

SEDIMENT BARRIER - HAY BALE OPTION

TEMPORARY EROSION CONTROL MEASURE

DRAWING NO.	REFERENCE TITLE

CAPACITY REPLACEMENT PROJECT
NORTHWEST PIPELINE CORPORATION
TYPICAL
SEDIMENT BARRIER - HAY BALE OPTION

SB

Williams
GAS PIPELINE

NO.	DATE	BY	REVISION DESCRIPTION	W.O. NO.	CHK.	APP.

DRAWN BY: KLL	DATE: 02-02-2001	ISSUED FOR BID:	SCALE: NOT TO SCALE
CHECKED BY:	DATE:	ISSUED FOR CONSTRUCTION:	
APPROVED BY:	DATE:	DRAWING NUMBER: 1408.34-X-0002	SHEET 2 OF 2
		XTIMEX XPATHX	

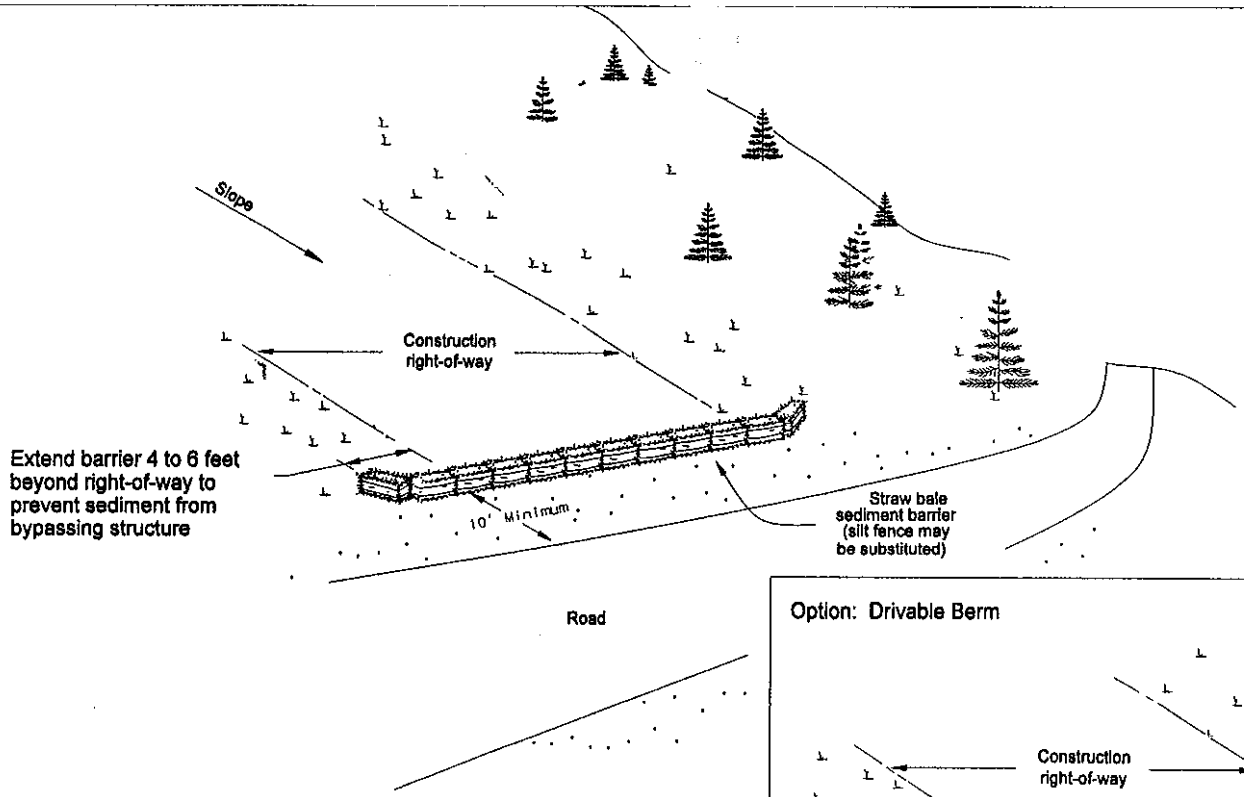

Notes:

Driving around sediment barriers is prohibited. Remove and replace barrier for access to right-of-way.

Install barriers off the right-of-way by hand only at location approved by Environmental Inspector.

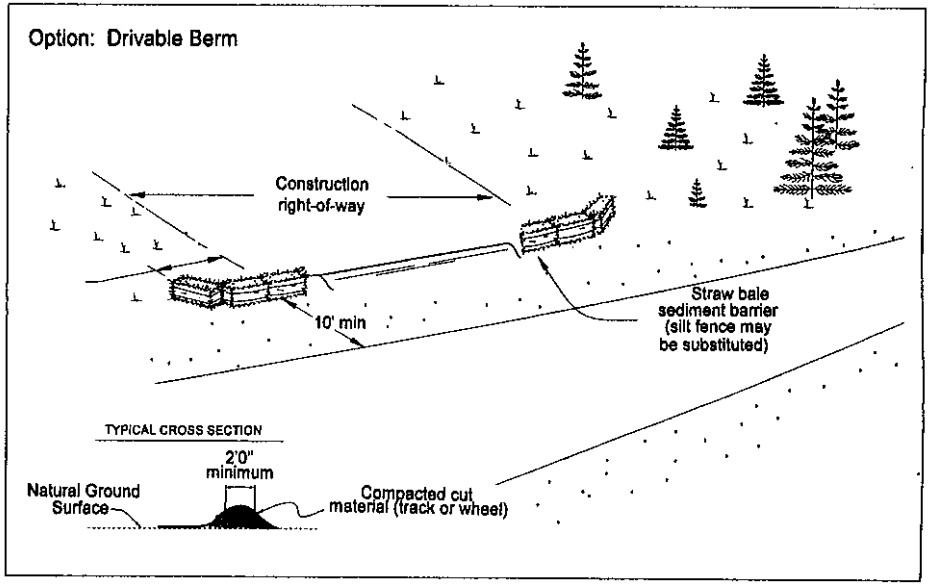

DRAWING NO.	REFERENCE TITLE

CAPACITY REPLACEMENT PROJECT
NORTHWEST PIPELINE CORPORATION
TEMPORARY SEDIMENT BARRIERS/DRIVABLE BERMS
ADJACENT TO ROAD CROSSINGS

DB

Williams. GAS PIPELINE

NO.	DATE	BY	REVISION DESCRIPTION	W.O. NO.	CHK.	APP.

DRAWN BY: PIC	DATE: 1-08-2004	ISSUED FOR BID:	SCALE: NONE
CHECKED BY:	DATE:	ISSUED FOR CONSTRUCTION:	
APPROVED BY:	DATE:	DRAWING NUMBER: 1408.34-X-0003	SHEET OF
		ZTIMEZ ZPATHZ	

SECTION A-A

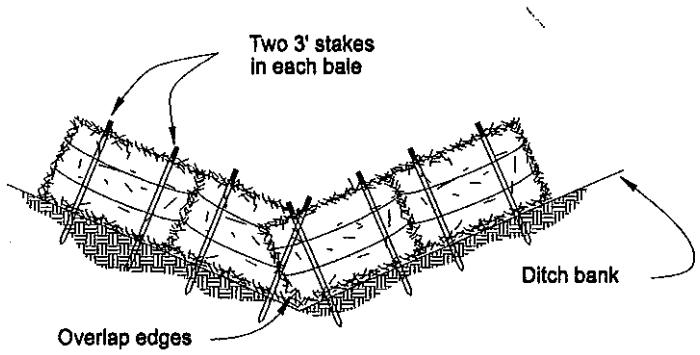

PLAN VIEW

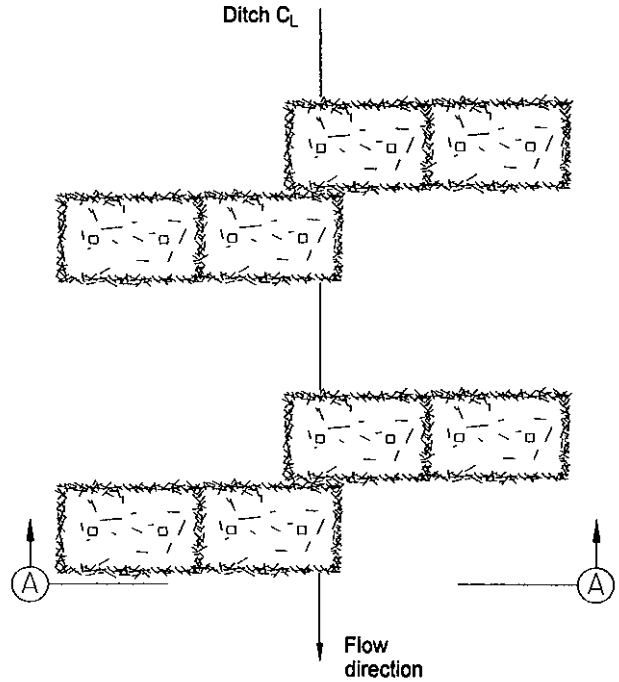

Notes:

Place straw bale sediment barriers in small intermittent drainages or road ditches that may convey sediment laden runoff from the right-of-way during storm events.

Drive stakes a minimum of 12 inches into the ground.

Use wood stakes whenever possible. Steel rebar may be used when soil is frozen or rocky.

Silt fence fabric may be used.

Sediment control structures can be placed off the construction right-of-way by hand if the location has been approved by the Environmental Inspector.

DRAWING NO.	REFERENCE TITLE

CAPACITY REPLACEMENT PROJECT
NORTHWEST PIPELINE CORPORATION
SEDIMENT CONTROL IN DITCHES AND SWALES

SC

Williams.
GAS PIPELINE

NO.	DATE	BY	REVISION DESCRIPTION	W.O. NO.	CHK.	APP.

DRAWN BY: PIC	DATE: 1-08-2004	ISSUED FOR BID:	SCALE: NONE
CHECKED BY:	DATE:	ISSUED FOR CONSTRUCTION:	
APPROVED BY:	DATE:	DRAWING NUMBER: 1408.34-X-0004	SHEET
		%TIME% %PATH%	OF

WETLAND CROSSING DETAIL

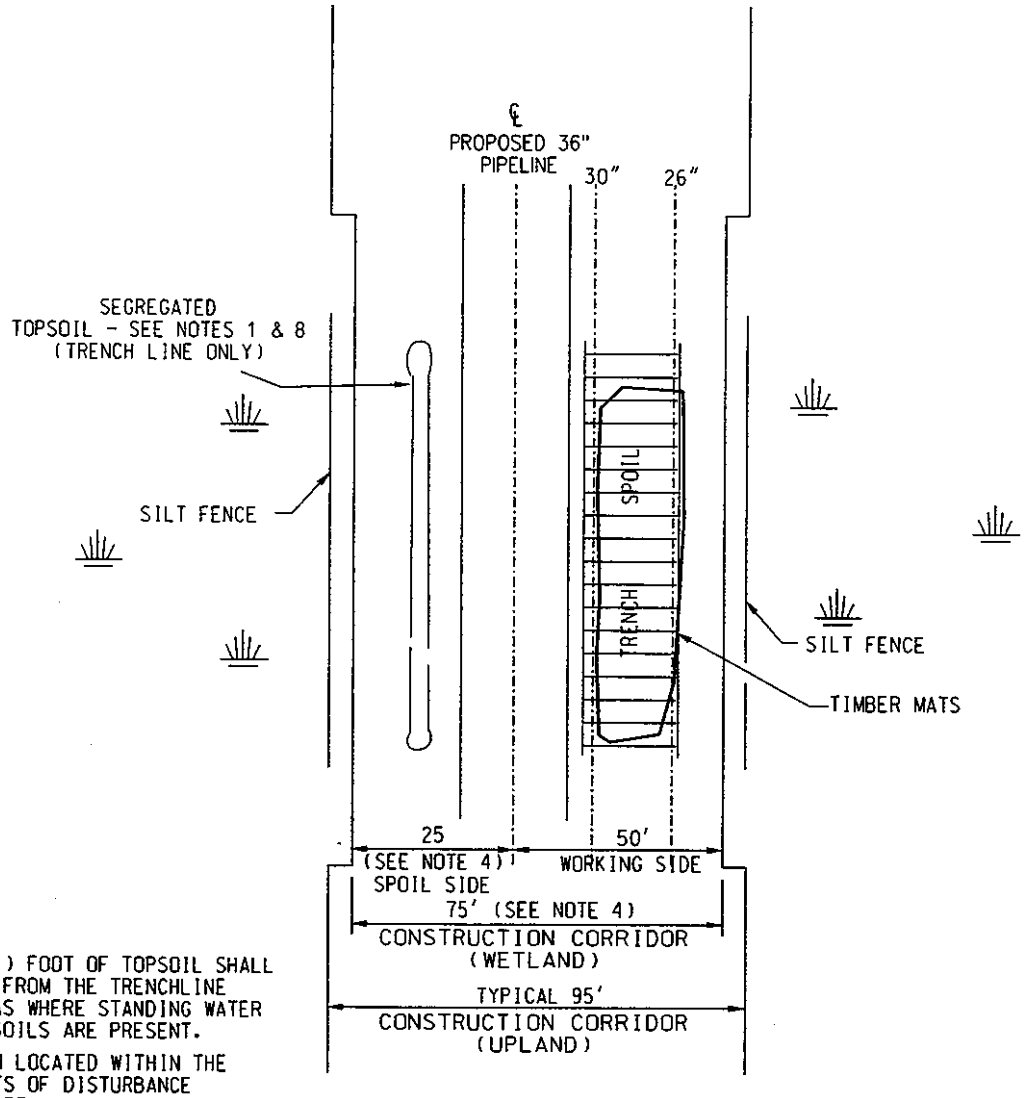

PLAN VIEW

NOTES:

1. THE TOP ONE (1) FOOT OF TOPSOIL SHALL BE SEGREGATED FROM THE TRENCHLINE EXCEPT IN AREAS WHERE STANDING WATER OR SATURATED SOILS ARE PRESENT.
2. THE VEGETATION LOCATED WITHIN THE PROPOSED LIMITS OF DISTURBANCE SHALL BE CUT OFF AT GROUND LEVEL LEAVING THE EXISTING ROOT SYSTEMS IN PLACE. EXCEPT AS SPECIFIED IN NOTE 3.
3. PULLING OF TREE STUMPS AND GRADING ACTIVITIES SHALL BE LIMITED TO THE AREA DIRECTLY OVER THE TRENCHLINE UNLESS SAFETY CONDITIONS REQUIRE THE REMOVAL OF TREE STUMPS FROM UNDER THE WORKING SIDE OF THE WORK CORRIDOR.
4. CONSTRUCTION CORRIDOR THROUGH WETLANDS WILL BE 75 FEET WIDE UNLESS A VARIANCE IS GRANTED. CONFIGURATION OF RIGHT-OF-WAY MAY VARY.

NO.	DATE	REVISION DESCRIPTION	BY	CHK/APPR

CAPACITY REPLACEMENT PROJECT
NORTHWEST PIPELINE CORPORATION
CROSSING DETAIL FOR WETLANDS

Williams GAS PIPELINE

DRAWN	APPROVED	DRAWING NUMBER: 1408.34-X-0005	SHEET 1 OF 2
CHECKED	SCALE NONE		

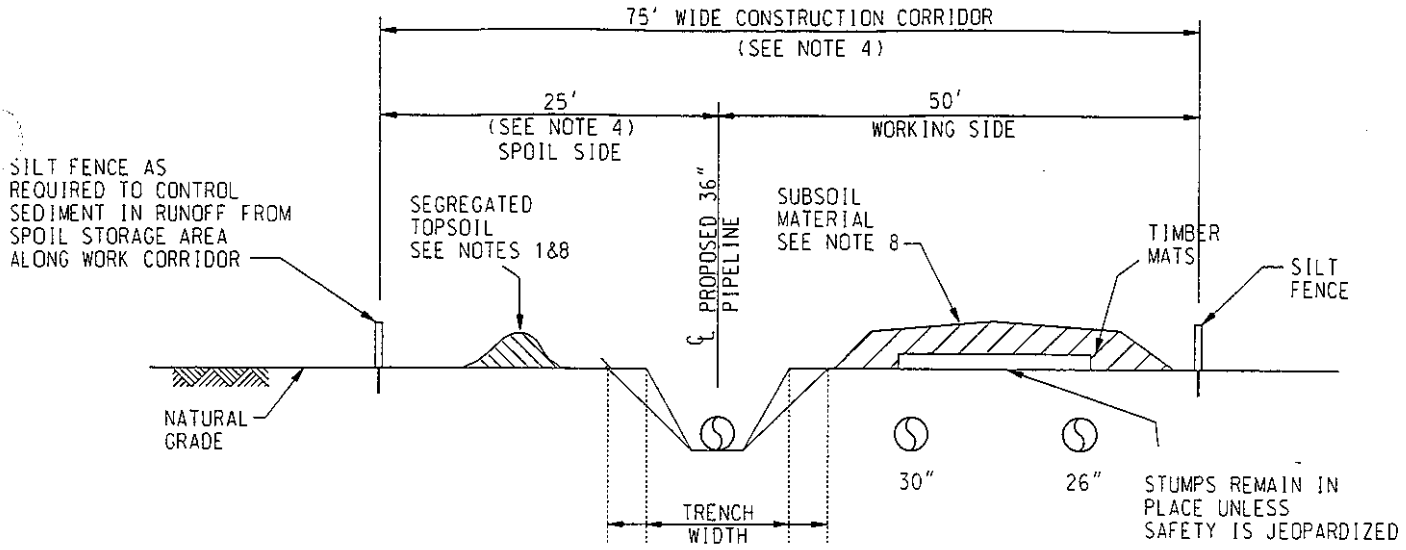

TRENCH WIDTH VARIES DEPENDING ON SOILS ENCOUNTERED DURING CONSTRUCTION

CROSS SECTION

NOTES CONTINUED:

5. SILT FENCE OR STRAW BALES WILL BE USED WHERE APPROPRIATE TO PREVENT SILTATION INTO WATER BODIES OR WETLANDS.

6. SILT FENCES OR STRAW BALES WILL ALSO BE USED TO PREVENT STOCKPILED SOIL OR SPOIL FROM LEAVING THE CONSTRUCTION RIGHT-OF-WAY OR WORKSPACES.

   TIMBER MATS MAY BE USED OVER SPOIL STORAGE WHERE STANDING WATER OR SATURATED SOILS ARE PRESENT.

8. TRENCH SPOIL MAY BE SPREAD ON THE MOWED VEGETATION OVER THE "HOTLINES" FOR ADDED PROTECTION.

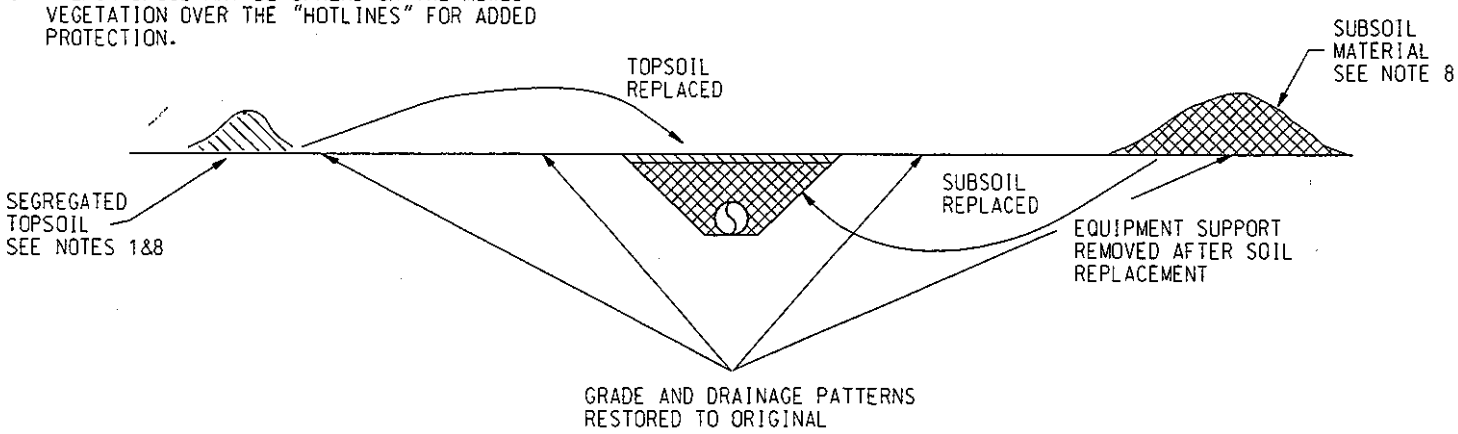

WETLAND RESTORATION

NO.	DATE	REVISION DESCRIPTION	BY	CHK/APPR.

CAPACITY REPLACEMENT PROJECT
NORTHWEST PIPELINE CORPORATION
CROSS-SECTION DETAIL FOR WETLANDS

Williams GAS PIPELINE

DRAWN	APPROVED	DRAWING NUMBER: 1408.34-X-0005	SHEET 2 OF 2
CHECKED	SCALE NONE		

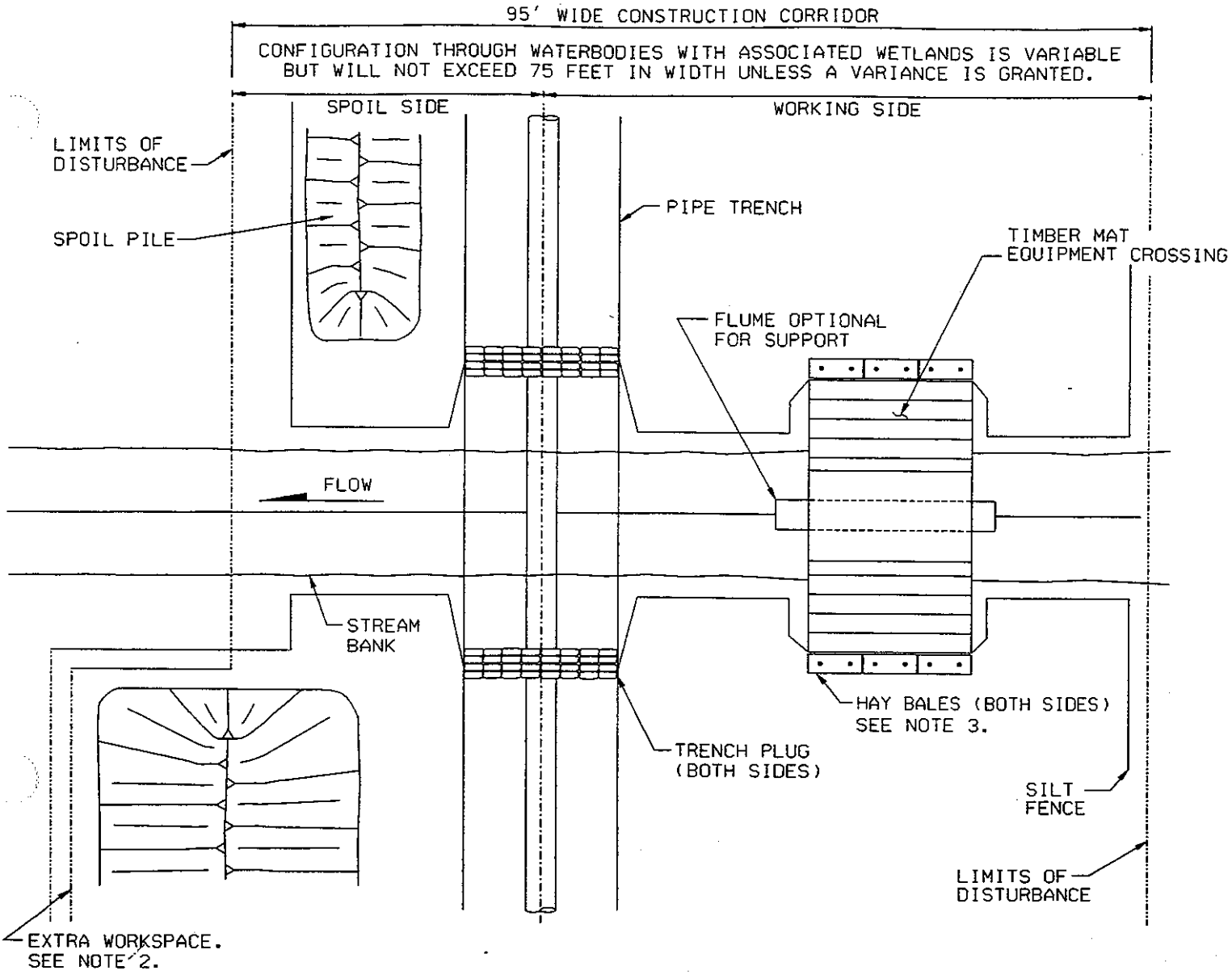

PLAN VIEW OF WET OPEN CUT METHOD

NOTES:

1. TRENCH WIDTH WILL VARY DUE TO SOIL CONDITIONS WHICH ARE NOT KNOWN UNTIL ACTUAL CONSTRUCTION TAKES PLACE.
2. EXTRA WORKSPACE WILL BE LOCATED 50 FEET FROM EDGE OF WATERBODY UNLESS A VARIANCE IS GRANTED. FOR EXTRA WORKSPACE LOCATIONS AND DIMENSIONS SEE ENVIRONMENTAL ALIGNMENT SHEETS.
3. TEMPORARY EROSION CONTROL MEASURES MUST BE REPLACED AT THE END OF EACH WORKING DAY.

NO.	DATE	REVISION DESCRIPTION	BY	CHK/APPR.

CAPACITY REPLACEMENT PROJECT
NORTHWEST PIPELINE CORPORATION
WATERBODY CROSSING DETAIL
WET OPEN CUT METHOD

Williams GAS PIPELINE

DRAWN	APPROVED	DRAWING NUMBER: 1408.34-X-0006	SHEET
CHECKED	SCALE NONE		

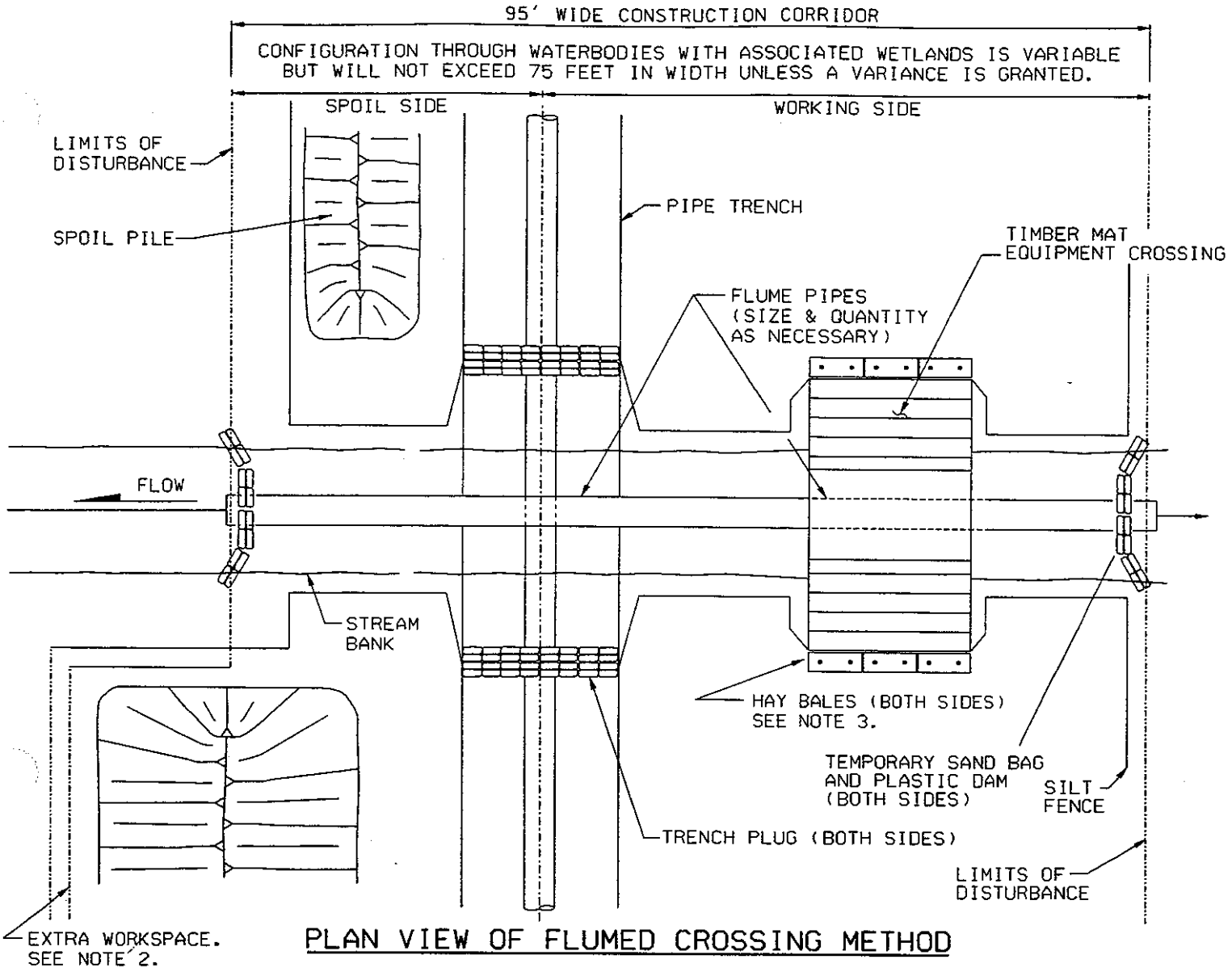

PLAN VIEW OF FLUMED CROSSING METHOD

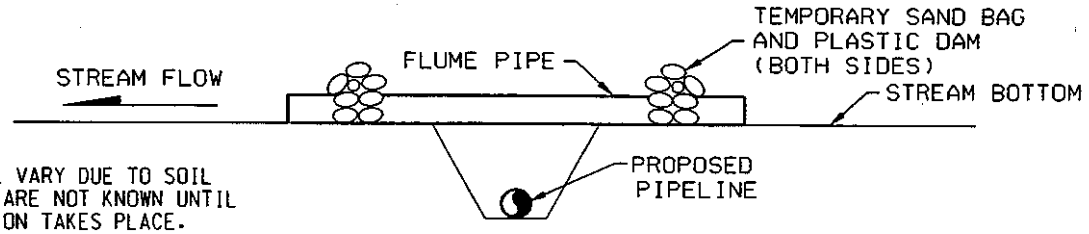

CROSS-SECTION OF FLUMED CROSSING METHOD

NOTES:

1. TRENCH WIDTH WILL VARY DUE TO SOIL CONDITIONS WHICH ARE NOT KNOWN UNTIL ACTUAL CONSTRUCTION TAKES PLACE.
2. EXTRA WORKSPACE WILL BE LOCATED 50 FEET FROM EDGE OF WATERBODY UNLESS A VARIANCE IS GRANTED. FOR EXTRA WORKSPACE LOCATIONS AND DIMENSIONS SEE ENVIRONMENTAL ALIGNMENT SHEETS.
3. TEMPORARY EROSION CONTROL MEASURES MUST BE REPLACED AT THE END OF EACH WORKING DAY.

NO.	DATE	REVISION DESCRIPTION	BY	CHK/APPR.

CAPACITY REPLACEMENT PROJECT
NORTHWEST PIPELINE CORPORATION
WATERBODY CROSSING DETAIL
FLUMED CROSSING METHOD

Williams GAS PIPELINE

DRAWN	APPROVED	DRAWING NUMBER: 1408.34-X-0007	SHEET
CHECKED	SCALE NONE		

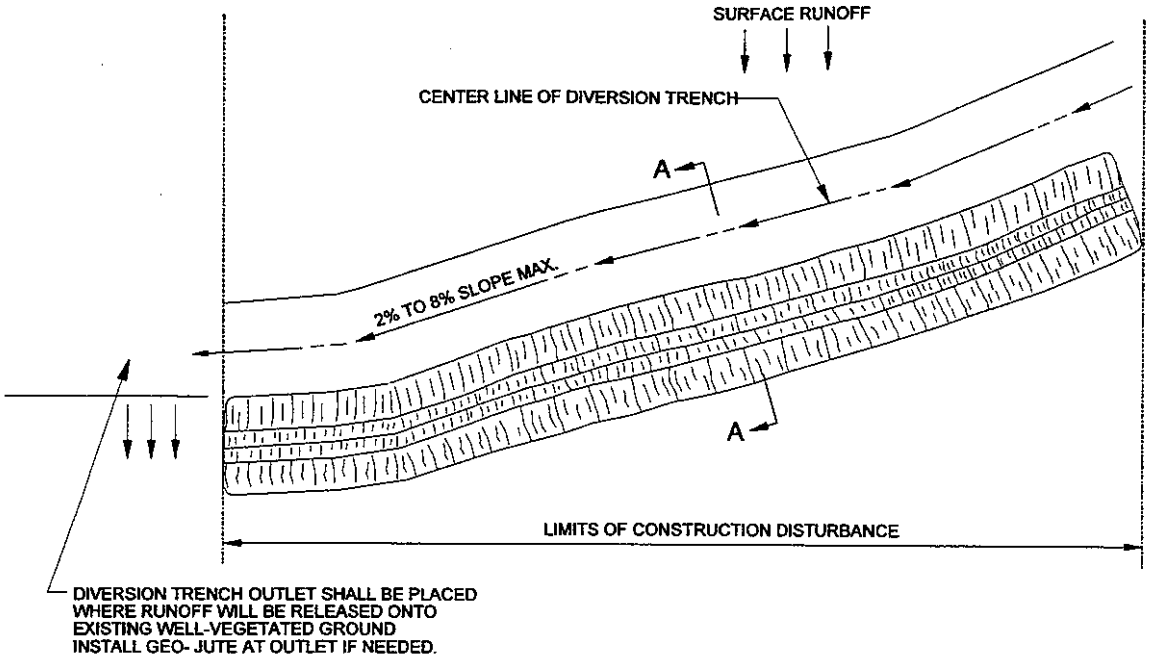

PLAN

NOTE:
SLOPE BREAKER SPACING WILL BE DETERMINED
BY WDNR FOREST PRACTICES ACT GUIDELINES

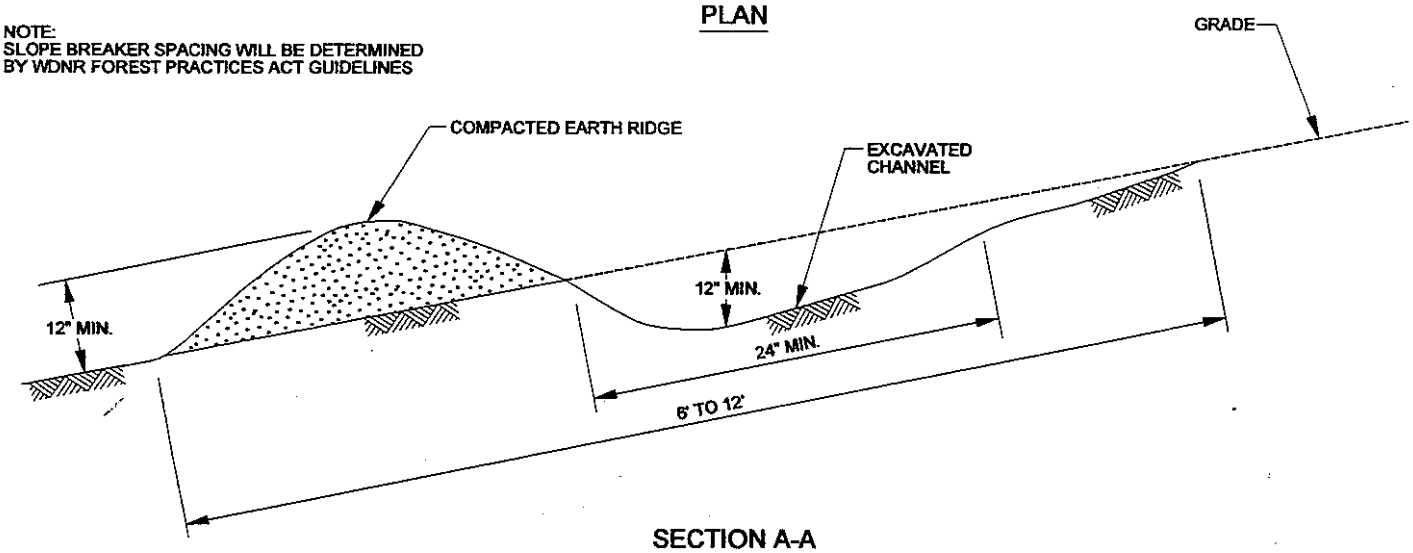

SECTION A-A

TEMPORARY AND PERMANENT SLOPE BREAKERS

TEMPORARY & PERMANENT EROSION CONTROL MEASURE

DRAWING NO.	REFERENCE TITLE

CAPACITY REPLACEMENT PROJECT
NORTHWEST PIPELINE CORPORATION
TYPICAL
TEMPORARY AND PERMANENT
SLOPE BREAKERS

TPSB

Williams
GAS PIPELINE

NO.	DATE	BY	REVISION DESCRIPTION	W.O. NO.	CHK.	APP.

DRAWN BY: KLL	DATE: 02-05-2001	ISSUED FOR BID:		SCALE: NOT TO SCALE
CHECKED BY:	DATE:	ISSUED FOR CONSTRUCTION:		
APPROVED BY:	DATE:	DRAWING NUMBER: 1408.34-X-0008		SHEET
		XTIMEX XPATHX		OF

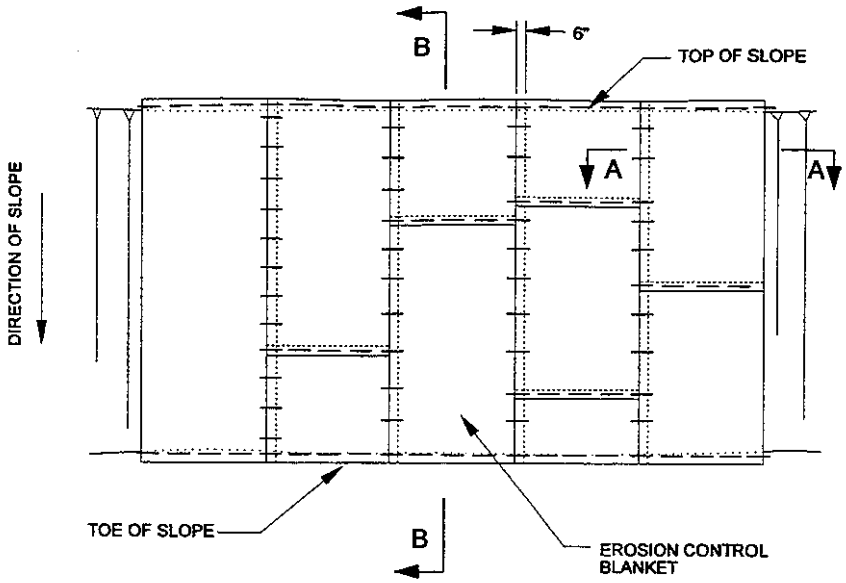

PLAN

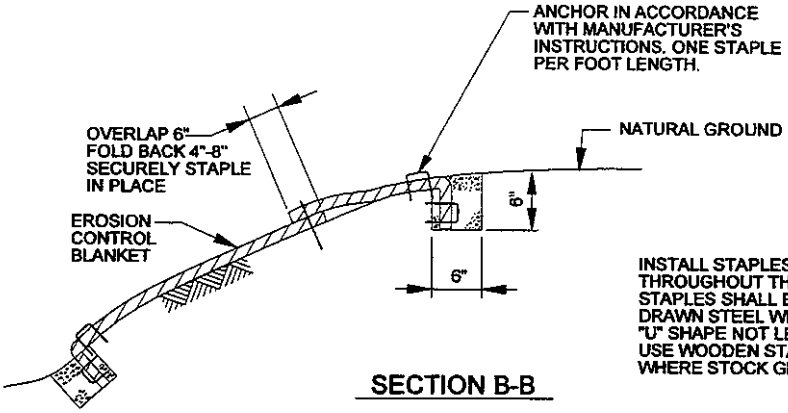

INSTALL STAPLES 18" TO 24" APART THROUGHOUT THE BLANKET/MAT. STAPLES SHALL BE 14-GAUGE COLD DRAWN STEEL WIRE FORMED IN A "U" SHAPE NOT LESS THAN 12" LENGTH. USE WOODEN STAKES AS AN ALTERNATIVE WHERE STOCK GRAZING IS ANTICIPATED.

SECTION B-B

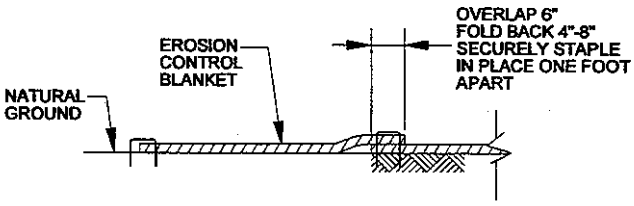

SECTION A-A

EMBANKMENT INSTALLATION

EROSION CONTROL MATTING

PERMANENT EROSION CONTROL MEASURE

DRAWING NO.	REFERENCE TITLE

CAPACITY REPLACEMENT PROJECT
NORTHWEST PIPELINE CORPORATION
TYPICAL
EROSION CONTROL MATTING

ECM

Williams GAS PIPELINE

NO.	DATE	BY	REVISION DESCRIPTION	W.O. NO.	CHK.	APP.

DRAWN BY: KLL	DATE: 02-02-2001	ISSUED FOR BID:	SCALE: NOT TO SCALE
CHECKED BY:	DATE:	ISSUED FOR CONSTRUCTION:	
APPROVED BY:	DATE:	DRAWING NUMBER: 1408.34-X-0009	SHEET 1 OF 4
		%TIME% %PATH%	

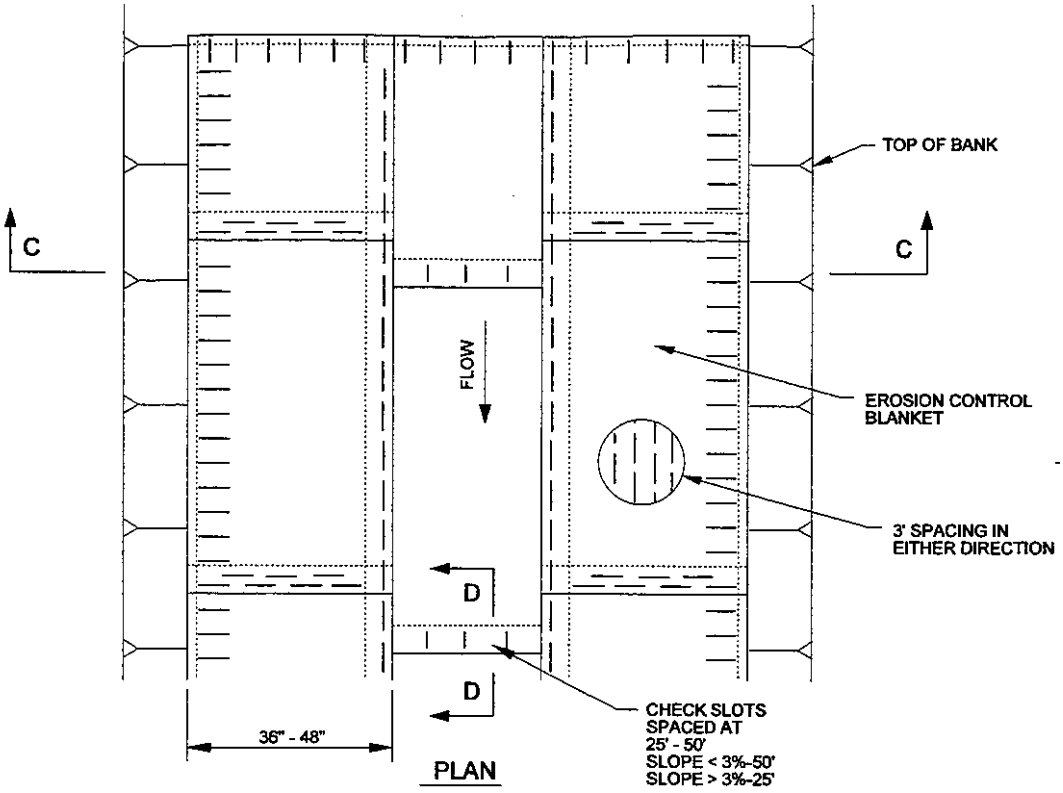

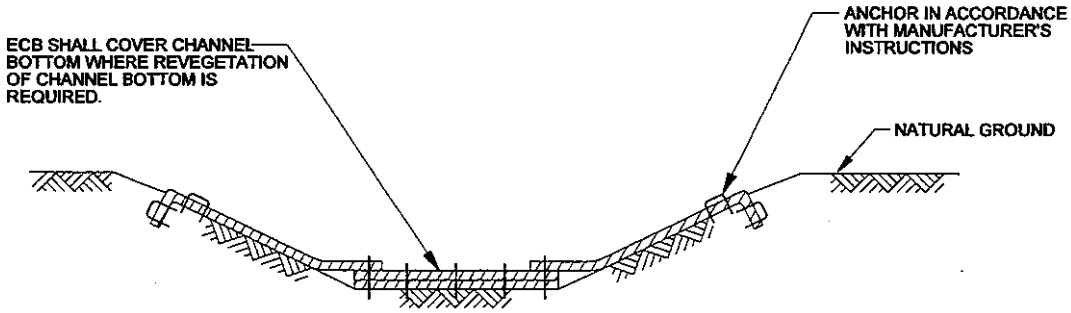

SECTION C-C

CHANNEL INSTALLATION

EROSION CONTROL MATTING

PERMANENT EROSION CONTROL MEASURE

DRAWING NO.	REFERENCE TITLE

CAPACITY REPLACEMENT PROJECT
NORTHWEST PIPELINE CORPORATION
TYPICAL
EROSION CONTROL MATTING

ECM

Williams
GAS PIPELINE

NO.	DATE	BY	REVISION DESCRIPTION	W.O. NO.	CHK.	APP.

DRAWN BY: KLL	DATE: 02-02-2001	ISSUED FOR BID:		SCALE: NOT TO SCALE
CHECKED BY:	DATE:	ISSUED FOR CONSTRUCTION:		
APPROVED BY:	DATE:	DRAWING NUMBER: 1408.34-X-0009		SHEET 2 OF 4
		%TIME% %PATH%		

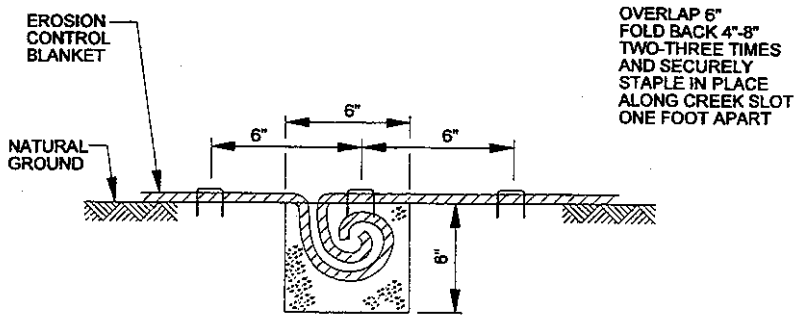

SECTION D-D

MATERIAL
NORTH AMERICAN GREEN SC150 (OR EQUIVALENT)

NOTES:

1. EROSION CONTROL BLANKETS SHALL EXTEND COMPLETELY ACROSS DISTURBED AREA TO PROTECT ERODIBLE SURFACES. THE SOIL SHALL BE PROPERLY PREPARED, SEEDED AND MULCHED PRIOR TO INSTALLATION.
2. INSTALL EROSION CONTROL BLANKETS ON FRESHLY GRADED EMBANKMENTS ON SLOPES IN EXCESS OF 3:1 (H:V) TO SUPPORT VEGETATION OR AS DIRECTED TO DO SO BY A COMPANY REPRESENTATIVE.
3. INSTALL BLANKETS IN ACCORDANCE WITH MANUFACTURER'S INSTRUCTIONS.
4. BLANKET SHALL BE LOOSELY INSTALLED AND TAMPED OR ROLLED IN PLACE AFTER INSTALLATION. STAPLES SHALL BE DRIVEN FLUSH WITH THE GROUND.

EROSION CONTROL MATTING

PERMANENT EROSION CONTROL MEASURE

DRAWING NO.	REFERENCE TITLE

CAPACITY REPLACEMENT PROJECT
NORTHWEST PIPELINE CORPORATION
TYPICAL
EROSION CONTROL MATTING

ECM

Williams
GAS PIPELINE

NO.	DATE	BY	REVISION DESCRIPTION	W.O. NO.	CHK.	APP.

DRAWN BY: KLL	DATE: 02-02-2001	ISSUED FOR BID:	SCALE: NOT TO SCALE
CHECKED BY:	DATE:	ISSUED FOR CONSTRUCTION:	
APPROVED BY:	DATE:	DRAWING NUMBER: 1408.34-X-0009	SHEET 3 OF 4
		XTIME X XPATH/	

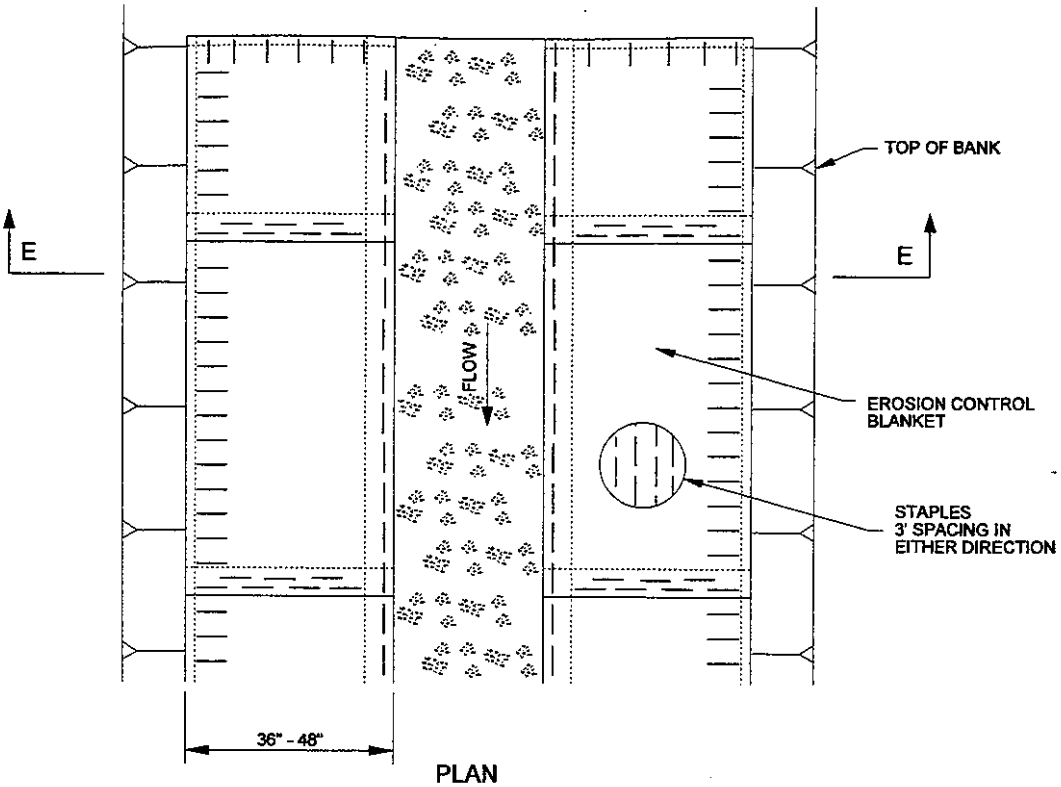

PLAN

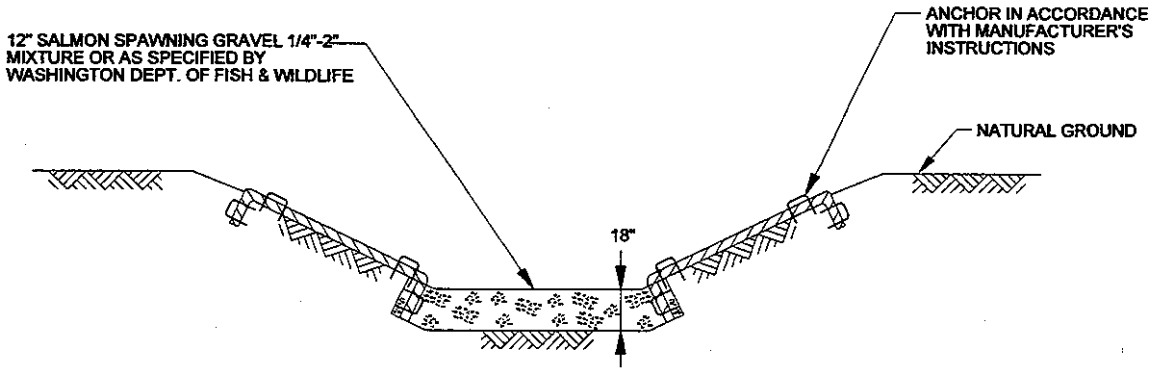

SECTION E-E

SALMON STREAM RESTORATION ALTERNATIVE

EROSION CONTROL MATTING

PERMANENT EROSION CONTROL MEASURE

DRAWING NO.	REFERENCE TITLE

CAPACITY REPLACEMENT PROJECT
NORTHWEST PIPELINE CORPORATION
TYPICAL
EROSION CONTROL MATTING

ECM

Williams
GAS PIPELINE

NO.	DATE	BY	REVISION DESCRIPTION	W.O. NO.	CHK.	APP.

DRAWN BY: KLL	DATE: 02-02-2001	ISSUED FOR BID:	SCALE: NOT TO SCALE
CHECKED BY:	DATE:	ISSUED FOR CONSTRUCTION:	
APPROVED BY:	DATE:	DRAWING NUMBER: 1408.34-X-0009	SHEET 4 OF 4
		%TIME% %PATH%	

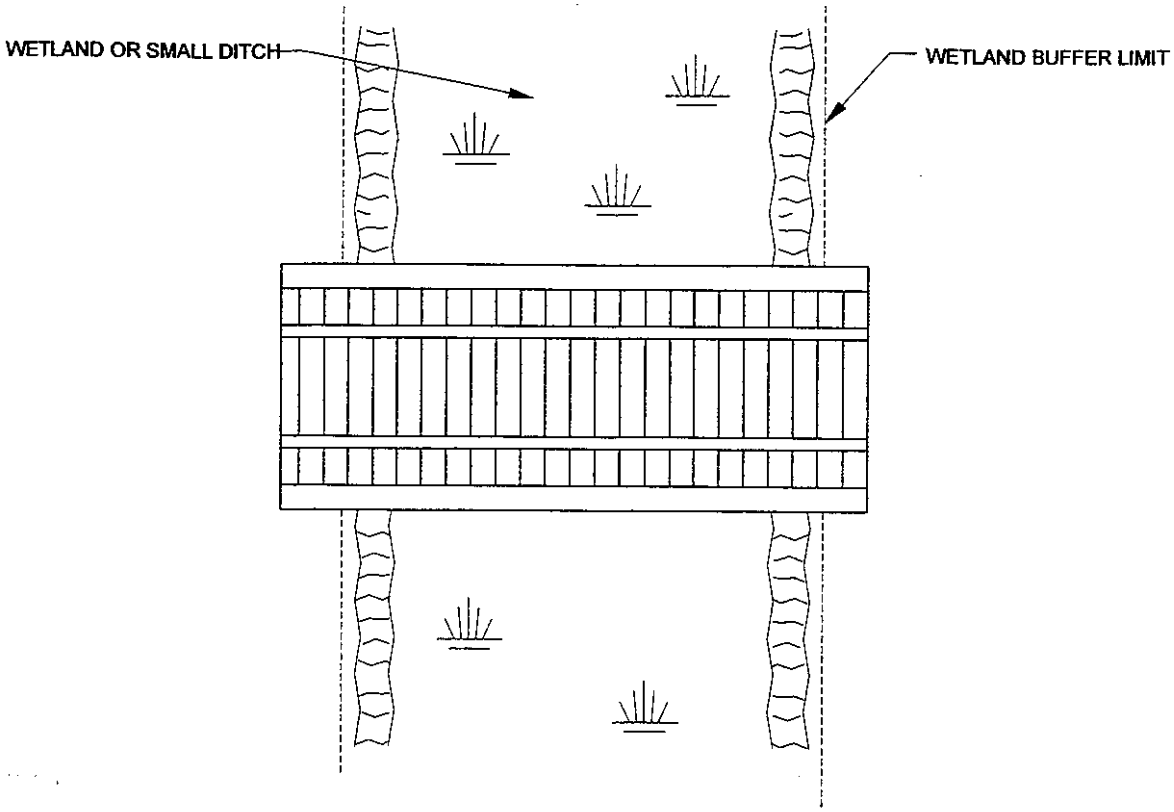

PLAN

PROFILE

NOTES:

1. PERIODICALLY CHECK INSTALLATION AND REMOVE BUILD-UP OF SEDIMENT OR DEBRIS.
2. MATERIALS PLACED IN WETLANDS SHALL BE COMPLETELY REMOVED DURING FINAL CLEAN-UP. REMOVAL OF THIS STRUCTURE IS NOT CONTINGENT UPON ESTABLISHMENT OF PERMANENT VEGETATION.
3. EXTEND TIMBER MATS TO EQUIPMENT CROSSING AT WATERBODY. CONTINUE EQUIPMENT MATS THROUGH THE WETLAND AND WATERBODY AREA.
4. USE ADDITIONAL TIMBER MAT LAYERS TO RAISE CROSSING ABOVE GRADE WHERE POOR SOIL CONDITIONS EXIST.

PORTABLE BRIDGE CROSSING

TEMPORARY EROSION CONTROL MEASURE

DRAWING NO.	REFERENCE TITLE

CAPACITY REPLACEMENT PROJECT
NORTHWEST PIPELINE CORPORATION
TYPICAL
PORTABLE BRIDGE CROSSING

P8

Williams
GAS PIPELINE

NO.	DATE	BY	REVISION DESCRIPTION	W.O. NO.	CHK.	APP.

DRAWN BY: KLL	DATE: 02-02-2001	ISSUED FOR BID:	SCALE: NOT TO SCALE
CHECKED BY:	DATE:	ISSUED FOR CONSTRUCTION:	
APPROVED BY:	DATE:	DRAWING NUMBER: 1408.34-X-0010	SHEET 1
		%TIME% %PATH%	OF 2

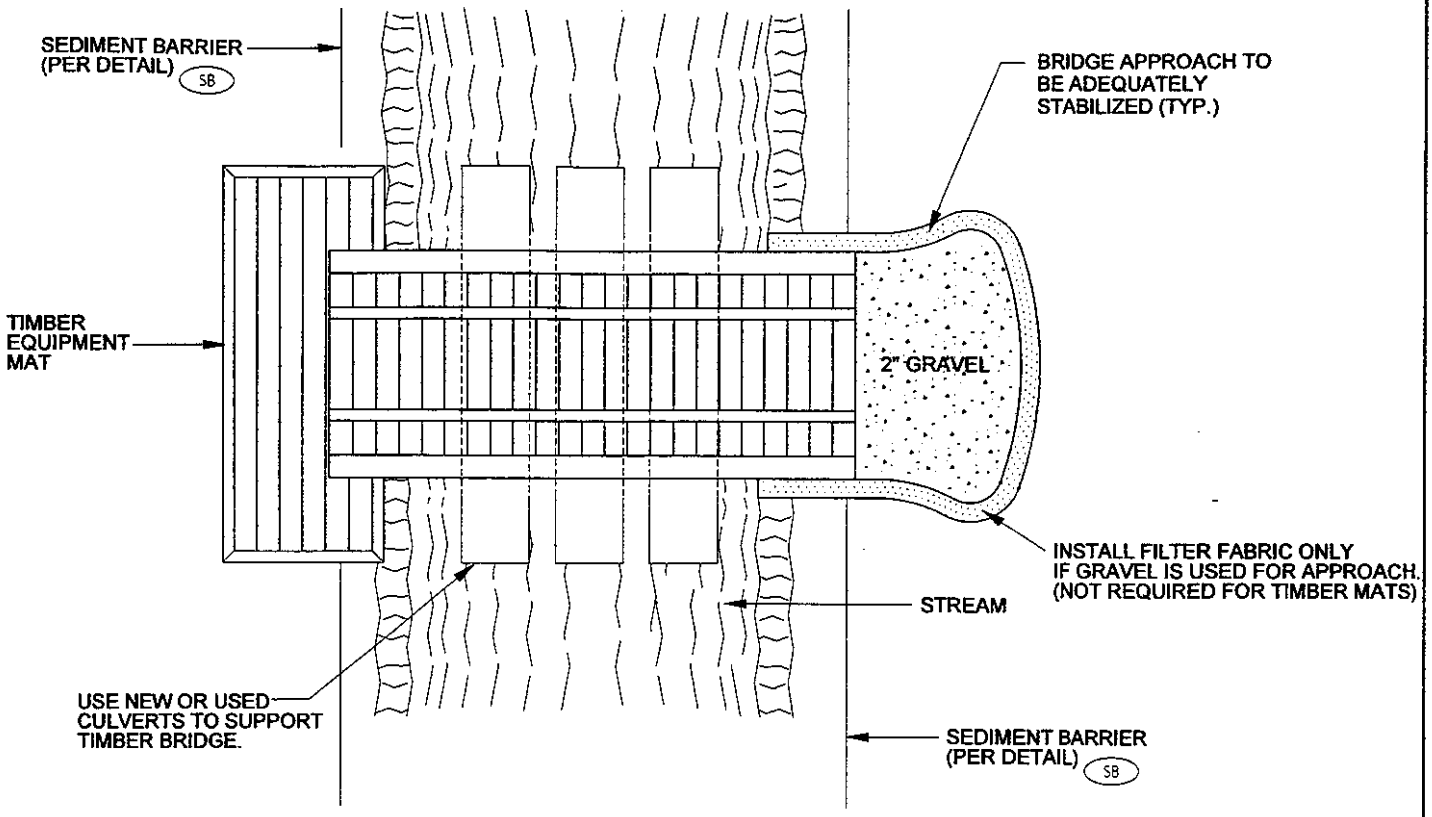

PLAN

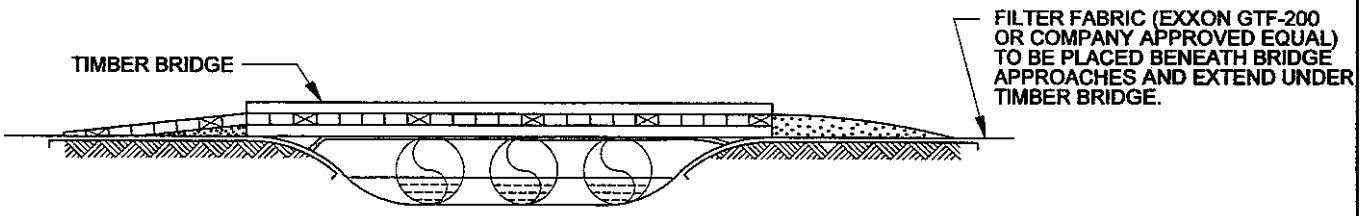

PROFILE

NOTES:

1. TIMBER BRIDGES SHALL BE ADEQUATELY ANCHORED AT ONE END.
2. PERIODICALLY CHECK BRIDGE INSTALLATION AND REMOVE BUILD-UP OF SEDIMENT OR DEBRIS ON BRIDGE.
3. BRIDGE APPROACHES SHALL BE EITHER COARSE AGGREGATE OR TIMBER EQUIPMENT MATS.
4. MATERIALS PLACED ALONG STREAM CHANNEL SHALL BE COMPLETELY REMOVED DURING FINAL CLEAN-UP. REMOVAL OF THIS STRUCTURE IS NOT CONTINGENT UPON ESTABLISHMENT OF PERMANENT VEGETATION.
5. CULVERTS SHALL BE USED TO SUPPORT THE TIMBER BRIDGE TO PREVENT SETTLEMENT OF THE BRIDGE IF NECESSARY. THE TIMBER BRIDGE SHALL REMAIN ABOVE THE WATER SURFACE ELEVATION AT ALL TIMES.
6. CONTRACTOR MAY USE MANUFACTURED PORTABLE BRIDGES OR RAIL CAR BRIDGES AS SUBSTITUTES FOR THE MEASURES SHOWN, IF APPROVED BY COMPANY REPRESENTATIVE.
7. SUPPORT CULVERTS SHALL NOT RESTRICT FLOW AND SHALL BE DESIGNED TO WITHSTAND AND PASS THE HIGHEST FLOW THAT WOULD OCCUR WHILE THE BRIDGE IS IN PLACE.
8. SEDIMENT AND DEBRIS SHALL NOT ENTER WATERBODY.

DRAWING NO.	REFERENCE TITLE

CAPACITY REPLACEMENT PROJECT
NORTHWEST PIPELINE CORPORATION
TYPICAL
PORTABLE BRIDGE CROSSING

PB

Williams. GAS PIPELINE

NO.	DATE	BY	REVISION DESCRIPTION	W.O. NO.	CHK.	APP.

DRAWN BY: KLL	DATE: 02-02-2001	ISSUED FOR BID:	SCALE: NOT TO SCALE
CHECKED BY:	DATE:	ISSUED FOR CONSTRUCTION:	
APPROVED BY:	DATE:	DRAWING NUMBER: 1408.34-X-0010	SHEET 2 OF 2
		XTIMEX XPATHX	

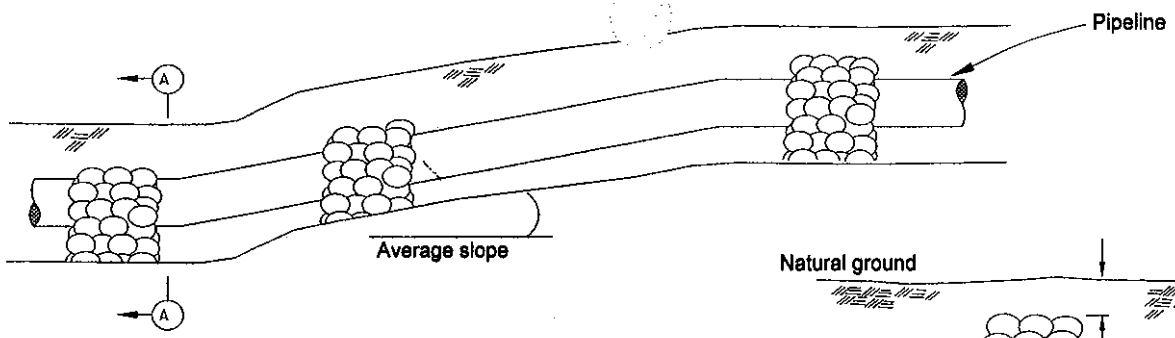

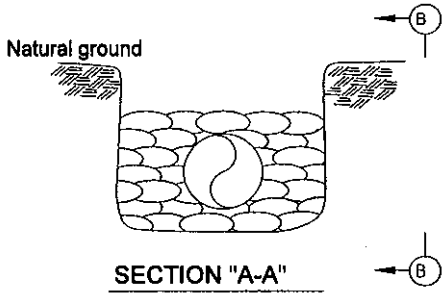

SECTION "A-A"

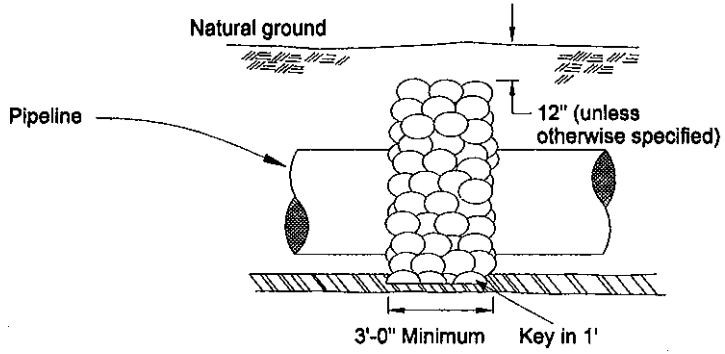

SECTION "B-B"

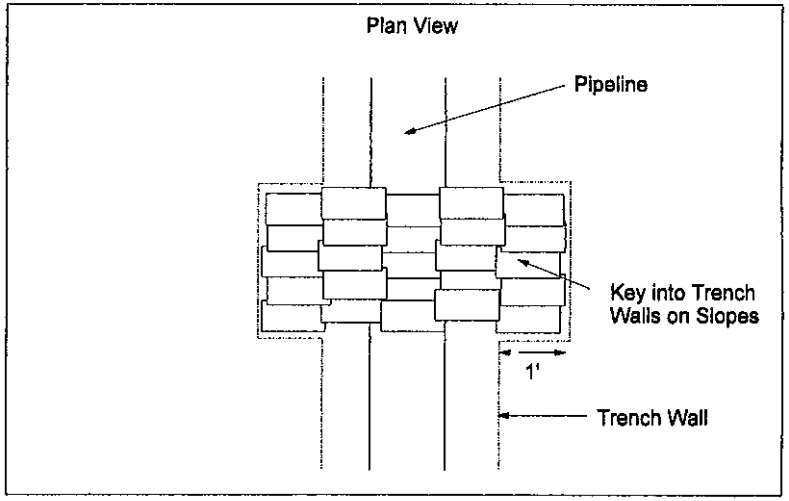

Notes:

Topsoil shall not be used in trench breakers.

Spacing of trench breakers shall be as shown on the Environmental Construction Alignment sheets or as directed by William's authorized representative. Soft plugs (unexcavated sections along the pipeline trench line) may be left in place to perform function of permanent breakers prior to pipe placement.

DRAWING NO.	REFERENCE TITLE

CAPACITY REPLACEMENT PROJECT
NORTHWEST PIPELINE CORPORATION
TRENCH BREAKER INSTALLATION

TB

Williams. GAS PIPELINE

NO.	DATE	BY	REVISION DESCRIPTION	W.O. NO.	CHK.	APP.

DRAWN BY: PIC	DATE: 1-08-2004	ISSUED FOR BID:	SCALE: NONE
CHECKED BY:	DATE:	ISSUED FOR CONSTRUCTION:	
APPROVED BY:	DATE:	DRAWING NUMBER: 1408.34-X-0011	SHEET OF
		XTIMEX XPATHX	

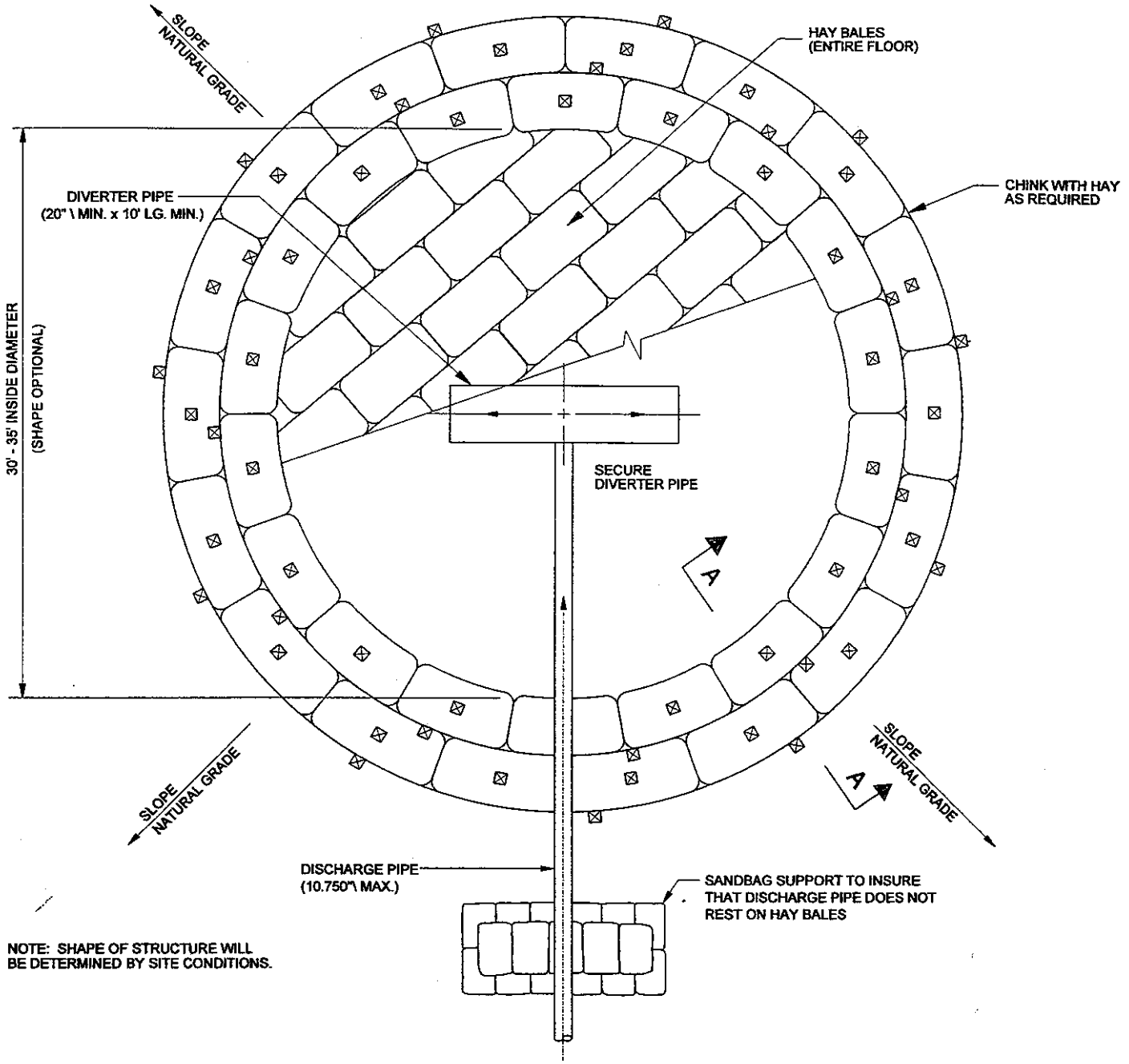

NOTE: SHAPE OF STRUCTURE WILL
BE DETERMINED BY SITE CONDITIONS.

HYDROSTATIC TEST DEWATERING STRUCTURE

TEMPORARY EROSION CONTROL MEASURE

DRAWING NO.	REFERENCE TITLE

CAPACITY REPLACEMENT PROJECT
NORTHWEST PIPELINE CORPORATION
TYPICAL HYDROSTATIC TEST
DEWATERING STRUCTURE

HDW

Williams
GAS PIPELINE

NO.	DATE	BY	REVISION DESCRIPTION	W.O. NO.	CHK.	APP.

DRAWN BY: KLL	DATE: 02-02-2001	ISSUED FOR BID:	SCALE: NOT TO SCALE
CHECKED BY:	DATE:	ISSUED FOR CONSTRUCTION:	
APPROVED BY:	DATE:	DRAWING NUMBER: 1408.34-X-0012	SHEET 1 OF 3
		%TIME% %PATH%	

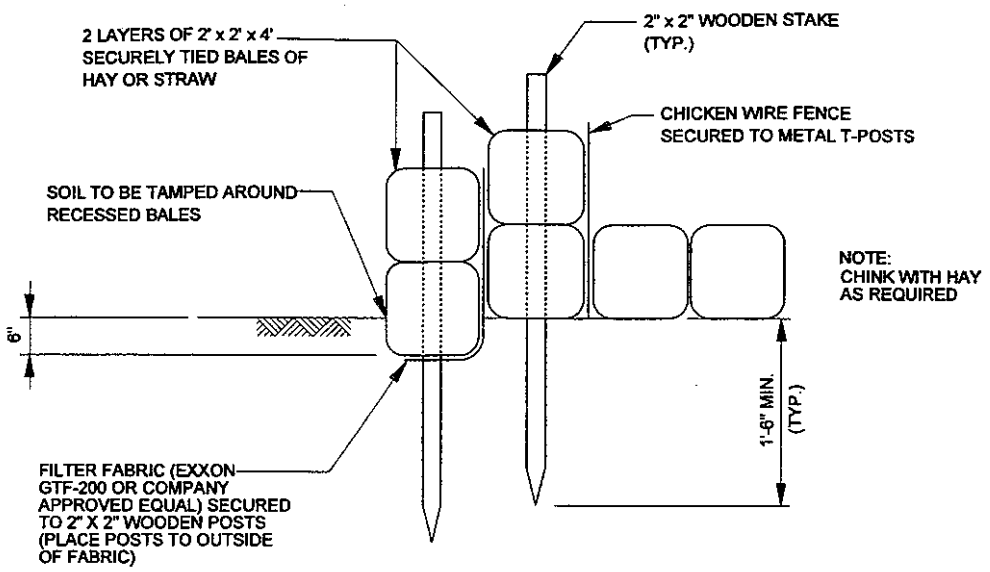

SECTION A-A

NOTE:

STAKES SECURING FILTER FABRIC AND CHICKEN WIRE FENCE ARE NOT SHOWN FOR CLARITY

NOTES:

1. STRUCTURE SHALL BE PLACED ON A LEVEL WELL VEGETATED SITE SUCH THAT WATER WILL FLOW AWAY FROM STRUCTURE AND ANY WORK AREAS.
2. FLOW RATES THROUGH DISCHARGE AND DIVERTOR PIPES SHALL BE SUCH THAT STRUCTURE WILL NOT OVERFLOW.
3. WHERE CONDITIONS WARRANT A 30' x 30' RECTANGULAR STRUCTURE MAY BE SUBSTITUTED FOR THE CIRCULAR CONFIGURATION SHOWN.
4. DIMENSIONS SHOWN ARE THE MINIMUM ACCEPTABLE VALUES AND MAY BE VARIED DEPENDING UPON SPECIFIC LOCATION.
5. CONTRACTOR SHALL USE CERTIFIED NOXIOUS WEED FREE HAY OR STRAW FOR STRUCTURE.

HYDROSTATIC TEST DEWATERING STRUCTURE

TEMPORARY EROSION CONTROL MEASURE

DRAWING NO.	REFERENCE TITLE

CAPACITY REPLACEMENT PROJECT
NORTHWEST PIPELINE CORPORATION
TYPICAL HYDROSTATIC TEST
DEWATERING STRUCTURE

HDW

Williams. GAS PIPELINE

NO.	DATE	BY	REVISION DESCRIPTION	W.O. NO.	CHK.	APP.

DRAWN BY: KLL	DATE: 02-02-2001	ISSUED FOR BID:	SCALE: NOT TO SCALE
CHECKED BY:	DATE:	ISSUED FOR CONSTRUCTION:	
APPROVED BY:	DATE:	DRAWING NUMBER: 1408.34-X-0012	SHEET 2 OF 3
		ZTIMEZ ZPATHZ	

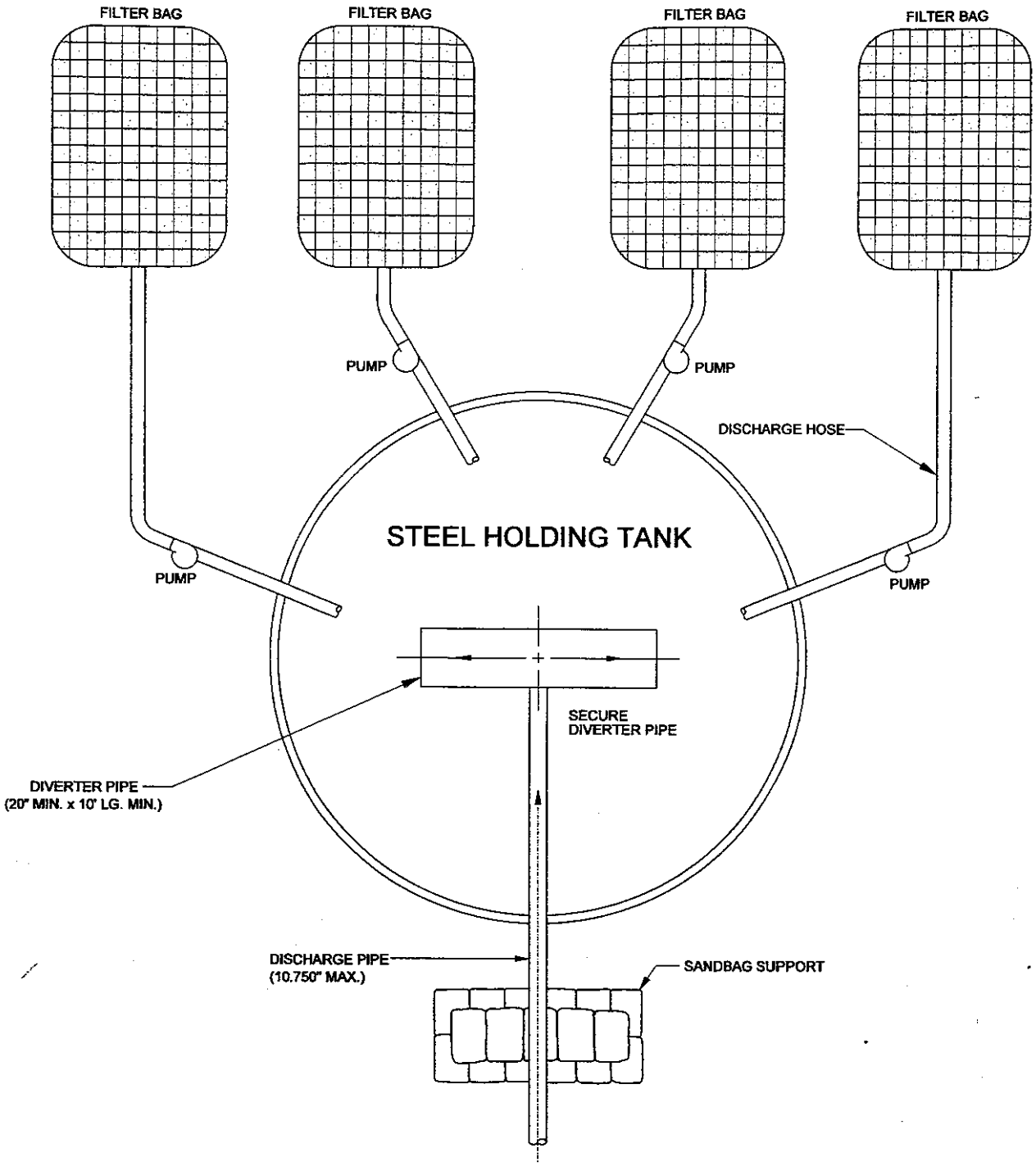

HYDROSTATIC TEST DEWATERING STRUCTURE

TEMPORARY EROSION CONTROL MEASURE

DRAWING NO.	REFERENCE TITLE

CAPACITY REPLACEMENT PROJECT
NORTHWEST PIPELINE CORPORATION
TYPICAL HYDROSTATIC TEST
DEWATERING STRUCTURE

HDW

Williams.
GAS PIPELINE

NO.	DATE	BY	REVISION DESCRIPTION	W.O. NO.	CHK.	APP.

DRAWN BY: KLL	DATE: 02-02-2001	ISSUED FOR BID:		SCALE: NOT TO SCALE
CHECKED BY:	DATE:	ISSUED FOR CONSTRUCTION:		
APPROVED BY:	DATE:	DRAWING NUMBER: 1408.34-X-0012		SHEET 3 OF 3
		XTIMEX XPATHX		

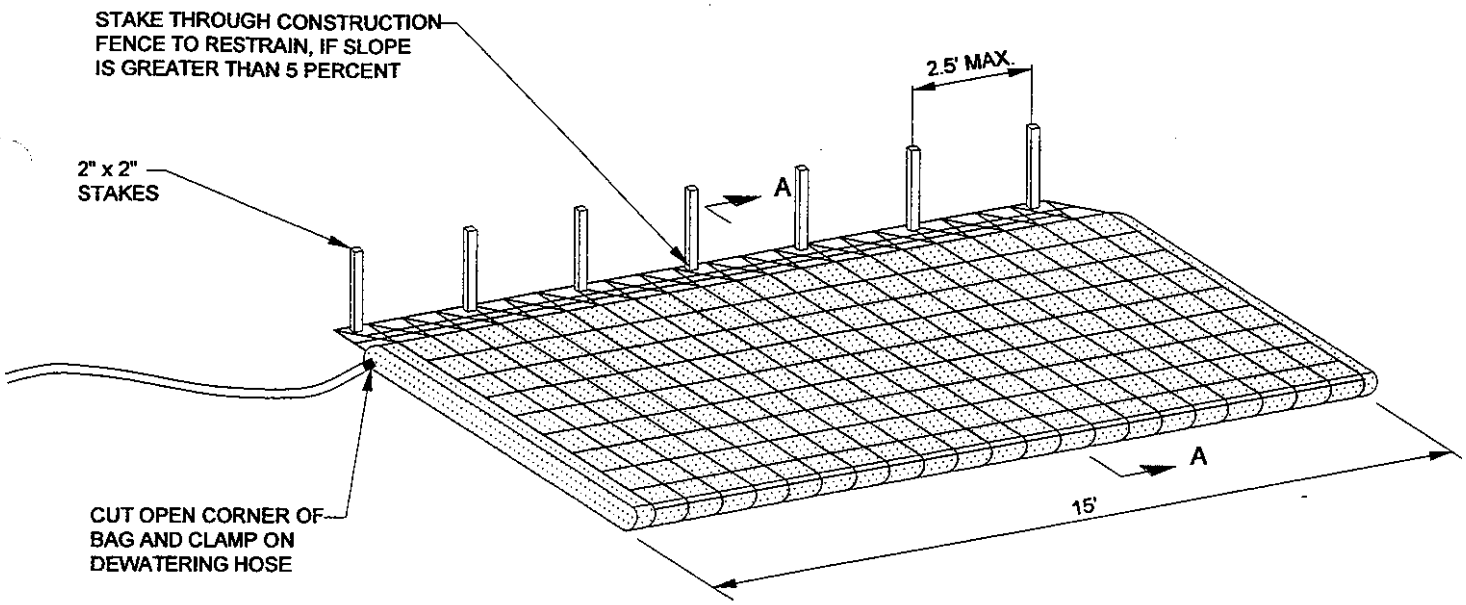

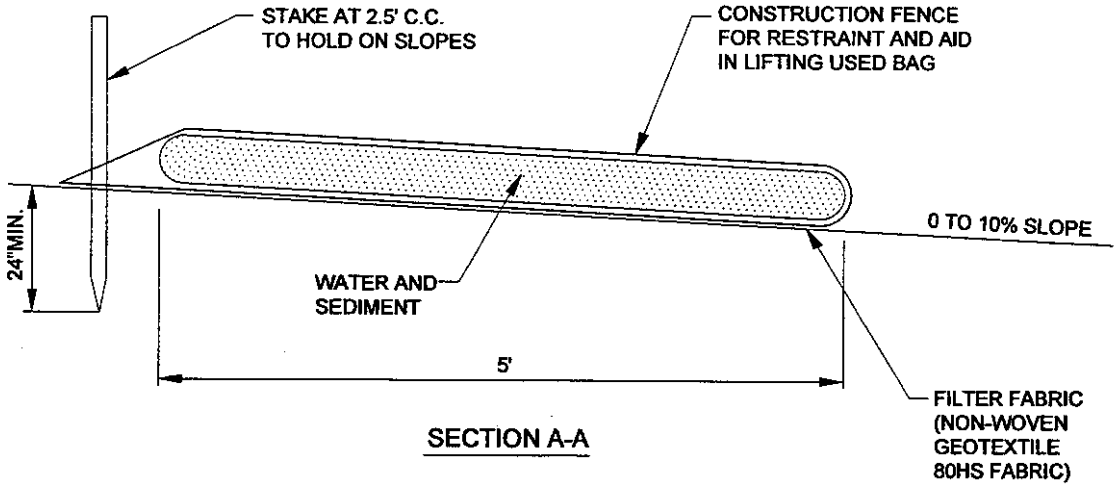

SECTION A-A

NOTES:

1. FILTER BAG SHALL BE PLACED ON A GENTLY SLOPING OR LEVEL, WELL GRADED VEGETATED SITE SUCH THAT WATER WILL FLOW AWAY FROM DEVICE AND ANY WORK AREAS.
2. THE FILTER BAG MUST BE STAKED IN PLACE AND SECURED TO THE PUMP DISCHARGE LINE.
3. FILTER BAG SHALL NOT BE USED FOR DISCHARGE FLOWS GREATER THAN 300 GPM.
4. DEVICE SHALL BE REMOVED AND DISPOSED OF AFTER BAG IS FILLED WITH SEDIMENT. SEDIMENT FROM BAG SHALL BE SPREAD IN AN UPLAND AREA.

TRENCH DEWATERING

TEMPORARY EROSION CONTROL MEASURE

DRAWING NO.	REFERENCE TITLE

CAPACITY REPLACEMENT PROJECT
NORTHWEST PIPELINE CORPORATION
TYPICAL
TRENCH DEWATERING

TDW

Williams GAS PIPELINE

NO.	DATE	BY	REVISION DESCRIPTION	W.O. NO.	CHK.	APP.

DRAWN BY: KLL	DATE: 02-02-2001	ISSUED FOR BID:	SCALE: NOT TO SCALE
CHECKED BY:	DATE:	ISSUED FOR CONSTRUCTION:	
APPROVED BY:	DATE:	DRAWING NUMBER: 1408.34-X-0013	SHEET 1 OF 3
		%TIME% %PATH%	

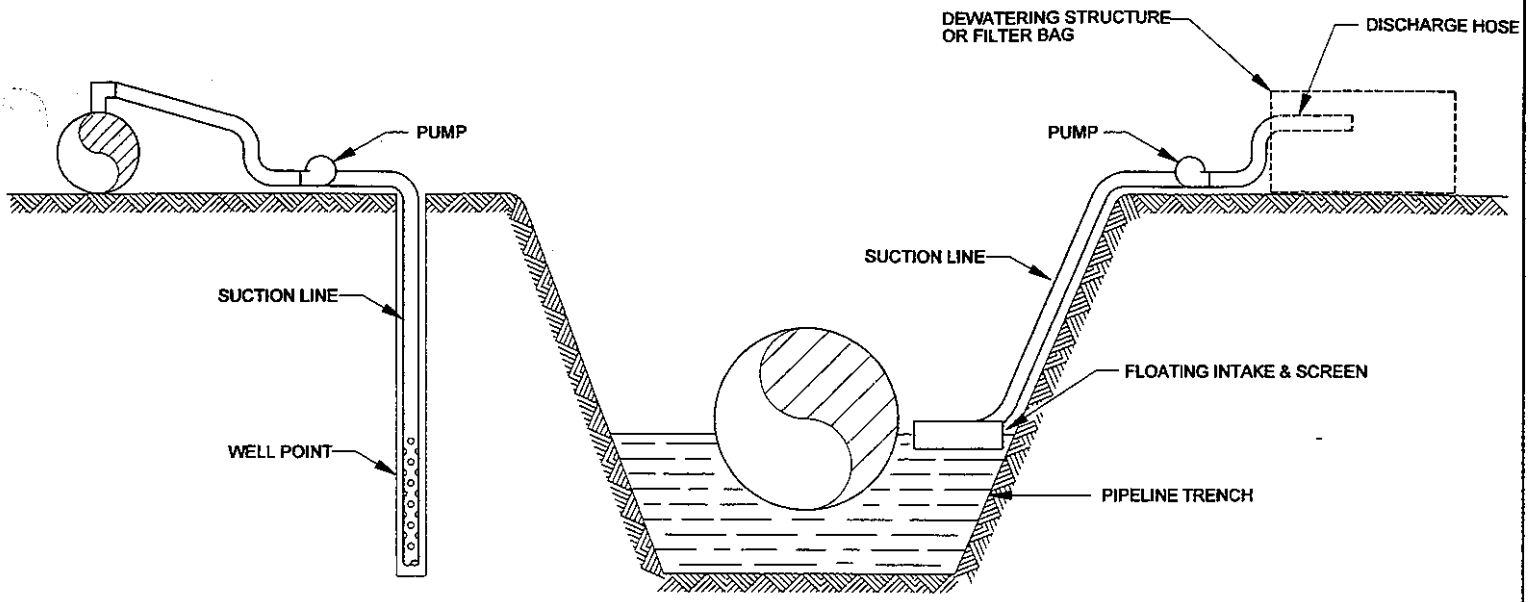

NOTES:

1. DEWATERING MEASURE/METHODS

   A. PUMP WATER TO A FILTERING STRUCTURE TYPICALLY CONSTRUCTED WITH HAY BALES OR GEOTEXTILE AND DISCHARGE AS "SHEET FLOW" OUT OF STRUCTURE. (SEE SHT. 3)
   B. PUMP WATER INTO A FILTER BAG. (SEE SHT. 1)
   C. PUMP WATER TO A SETTLING TANK AND HAUL TO A DISPOSAL SITE.
   D. PUMP WATER TO A SETTLING TANK AND DISCHARGE OVERLAND.
   E. TRANSFER WATER TO NEXT SECTION OF TRENCH.
   F. INSTALL WELL POINTS AND PUMP TO FILTERING STRUCTURE AND DISCHARGE TO DRAINAGE, CHANNEL OR SHEET FLOW.
   G. INSTALL WELL POINTS AND DISCHARGE SHEET FLOW.
   H. DISPOSE OF WATER COLLECTED IN TANK OR FILTRATION STRUCTURE BY AERATION THROUGH A SPRINKLER SYSTEM.

2. WATER PUMPED OUT OF TRENCH SHALL NOT BE DISCHARGED INTO WATERBODIES OR WETLANDS.
3. PUMP SHALL BE CONTROLLED SO THAT DISCHARGE DOES NOT OVERFLOW DEWATERING STRUCTURE.
4. PUMP SUCTION HOSE MUST NOT BE ALLOWED TO SET ON THE TRENCH BOTTOM. PROVISIONS MUST BE MADE TO ELEVATE THE SUCTION HOSE TO AT LEAST ONE FOOT ABOVE THE BOTTOM UNTIL BOTTOM DEWATERING IS NECESSARY.

TRENCH DEWATERING

TEMPORARY EROSION CONTROL MEASURE

DRAWING NO.	REFERENCE TITLE

CAPACITY REPLACEMENT PROJECT
NORTHWEST PIPELINE CORPORATION
TYPICAL
TRENCH DEWATERING

TDW

Williams
GAS PIPELINE

NO.	DATE	BY	REVISION DESCRIPTION	W.O. NO.	CHK.	APP.

DRAWN BY: KLL	DATE: 02-02-2001	ISSUED FOR BID:	SCALE: NOT TO SCALE	
CHECKED BY:	DATE:	ISSUED FOR CONSTRUCTION:		
APPROVED BY:	DATE:	DRAWING NUMBER: 1408.34-X-0013	SHEET 2	
		XTIMEX XPATHX	OF 3	

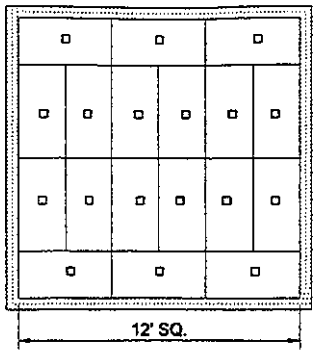

STEP 1

ARRANGE HAY BALES OVER FILTER FABRIC ON LEVEL LAND TIGHTLY PACKED AS SHOWN TO COVER AN AREA APPROXIMATELY 12' x 12'. SECURE EACH HAYBALE IN PLACE BY DRIVING REBAR OR A WOODEN STAKE THROUGH EACH OF THE HAY BALES

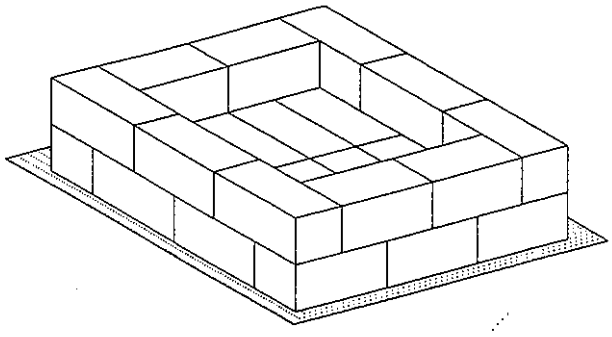

STEP 2

INSTALL ANOTHER LAYER OF HAY BALES ON THE OUTER EDGE AS SHOWN

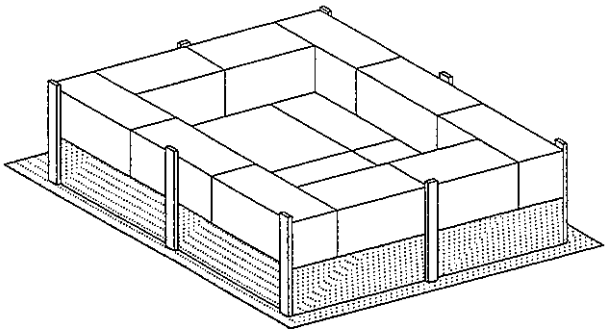

STEP 3

INSTALL FILTER FABRIC ALL AROUND HAY BALE STRUCTURE AS SHOWN

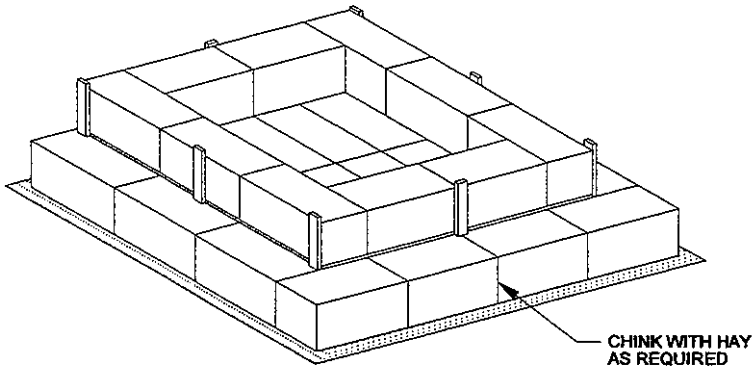

STEP 4

INSTALL ANOTHER LAYER OF HAY BALES ON THE OUTSIDE OF THE FILTER FABRIC AND SECURE IN PLACE BY DRIVING REBAR OR A WOODEN STAKE THROUGH EACH OF THE OUTER HAY BALES

NOTES:

1. WHERE POSSIBLE STRUCTURE SHALL BE PLACED ON A LEVEL, WELL VEGETATED SITE SUCH THAT WATER WILL FLOW AWAY FROM STRUCTURE AND ANY WORK AREAS.
2. THIS MEASURE SHALL BE REMOVED UPON COMPLETION OF THE PROJECT. REMOVAL IS NOT CONTINGENT UPON ESTABLISHMENT OF PERMANENT VEGETATION. MATERIAL FROM BALES MAY BE SCATTERED ON RIGHT-OF-WAY.
3. CONTRACTOR SHALL USE CERTIFIED NOXIOUS WEED FREE HAY OR STRAW FOR STRUCTURE.

TRENCH DEWATERING

TEMPORARY EROSION CONTROL MEASURE

DRAWING NO.	REFERENCE TITLE

CAPACITY REPLACEMENT PROJECT
NORTHWEST PIPELINE CORPORATION
TYPICAL
TRENCH DEWATERING

TDW

Williams
GAS PIPELINE

NO.	DATE	BY	REVISION DESCRIPTION	W.O. NO.	CHK.	APP.

DRAWN BY: KLL	DATE: 02-02-2001	ISSUED FOR BID:	SCALE: NOT TO SCALE
CHECKED BY:	DATE:	ISSUED FOR CONSTRUCTION:	
APPROVED BY:	DATE:	DRAWING NUMBER: 1408.34-X-0013	SHEET 3 OF 3
		XTIMEX XPATHX	

ATTACHMENT B

SOIL TESTING LABORATORIES

NUTRIENT MANAGEMENT guide

EM 8677
Revised January 2002

A List of

Analytical Laboratories

Serving Oregon

J. Hart

Soil testing and plant analysis aid commercial growers, gardeners, and homeowners in making decisions about fertilizing or applying soil amendments. This fertilizer guide lists a variety of laboratories serving Oregon, and provides specific information about laboratory services.

To compile this list, the OSU Extension Service requested information from labs providing services for Oregon and adjacent areas. OSU Extension Service makes no endorsement by listing a laboratory; conversely, omission of a laboratory does not indicate that it's unsuitable. Another source for locating commercial laboratories is the yellow pages of your local telephone directory.

Before submitting material to a lab, pay attention to the following guidelines:

- Be sure the test you request is the right one to answer your question. Nutrients aren't the only factor for successful crop production, so a soil test may not tell you why your plants don't grow. Ask a county agent or other agriculture professional which tests you may need.
- The goal of a soil or tissue test is a fertilizer recommendation. Fertilizer recommendations are based on soil/tissue tests that follow a set procedure or recipe. For example, OSU fertilizer recommendations are based on procedures used in OSU's Central Analytical Laboratory. Many labs say they use "comparable" procedures, but they may not. A laboratory that uses a procedure different from OSU's most likely will give a different fertilizer recommendation.
- Before sending samples, call the lab to inquire about costs and shipping instructions. For example, soil samples to be tested for nitrate-nitrogen should be refrigerated or dried rather than sent moist at room temperature.
- Beware of low prices. Laboratory procedures cost money to perform. A lab quoting a low price usually analyzes a few elements and estimates the others. You do not want estimates—make sure you obtain results from analytical work.
- For information on taking soil samples, [illegible] *Sampling for Home Gardens and Small Acreages.*

Laboratories wishing to be added to this list may contact:
John Hart, Extension Soil Science Specialist
Department of Crop and Soil Science
Ag & Life Sciences Building 3017
Oregon State University
Corvallis, OR 97331-7306
541-737-5712

This list will be revised regularly.

A list of laboratories approved by the Oregon Health Division for drinking water analysis can be obtained by contacting the Oregon Health Division, Drinking Water Systems, P.O. Box 14450, Portland, OR 97214-0450, or calling 503-731-4010 or 503-731-4009.

For additional copies of this publication, visit your local county office of the OSU Extension Service, or contact:
Publication Orders
Extension & Station Communications
Oregon State University
422 Kerr Administration
Corvallis, OR 97331-2119
Fax: 541-737-0817

You may order up to six copies of this publication at no charge. If you request seven or more copies, include 25 cents for each copy beyond six.

This publication also is available on the World Wide Web (**eesc.orst.edu**). Open our Publications and Videos catalog and choose Agriculture, followed by Soil and Water.

John Hart, Extension soil scientist, Oregon State University. This publication replaces FG 74, *A List of Analytical Laboratories Serving Oregon.*

OREGON STATE UNIVERSITY
EXTENSION SERVICE

© 2002 Oregon State University. This publication may be photocopied or reprinted in its entirety for noncommercial purposes.

Produced and distributed in furtherance of the Acts of Congress of May 8 and June 30, 1914. Extension work is a cooperative program of Oregon State University, the U.S. Department of Agriculture, and Oregon counties. Oregon State University Extension Service offers educational programs, activities, and materials—*without regard to race, color, religion, sex, sexual orientation, national origin, age, marital status, disability, and disabled veteran or Vietnam-era veteran status*—as required by Title VI of the Civil Rights Act of 1964, Title IX of the Education Amendments of 1972, and Section 504 of the Rehabilitation Act of 1973. Oregon State University Extension Service is an Equal Opportunity Employer.

Revised April 2000. Revised January 2002.

Laboratory	Area Served*			Analyses								Other Services	
				Soil			Water			Plant Tissue	Feed		
	Oregon (OR)	Idaho (ID)	Washington (WA)	Agricultural	Environmental (heavy metals)	Environmental (pesticides, chem. cont.)	Biological (total & fecal coliform)	Chemical (pesticides)	Chemical (nitrate in drinking water)	Plant tissue	Feed	Fertilizer recomm. (FR)	Consulting (Cnslt.)
A & L Western Agricultural Laboratories ..... 1311 Woodland Ave., Suite 1, Modesto, CA 95351-4732, 209-529-4080 • FAX 209-529-4736; **Portland Office** 10220 S.W. Nimbus Ave., Bldg. K-9, Portland, OR 97223, 503-968-9225 • FAX 503-598-7702	●	●	●	●	●	●	●	●	●	●	●	●	●
Agri-Check, Inc. ..... 323 Sixth St., P.O. Box 1350, Umatilla, OR 97882, 541-922-4894 or 800-537-1129	●	●	●	●	●		●		●	●	●	●	●
Agri-Test, Inc. ..... 2043 Kimberly Rd., P.O. Box 4, Twin Falls, ID 83303-0004, 208-734-2303 or 800-632-0842	●	●	●	●	●	●	●	●	●	●	●	●	●
AmTest, Oregon, LLC ..... 13035 S.W. Pacific Highway, Portland, OR 97223, 503-639-9311	●				●	●	●		●				●
Analytical Laboratory and Consultants, Inc. ... 361 W. 5th Ave., Eugene, OR 97401, 541-485-8404 or 800-262-5973, FAX 541-484-5995 • anlabinc@rio.com	●			SC	●	SC	●	SC	●				●
Basin Agri-Serve ..... 22109 Stateline Rd., P.O. Box R, Merrill, OR 97633, 541-798-5112 • FAX 541-798-5114	●			●					●	●	●	●	
Brookside Laboratories, Inc. ..... 308 S. Main St., New Knoxville, OH 45871, 419-753-2448 • FAX 419-753-2949	●	●	●	●	●	●	●	●	●	●	●		●
Cascade Analytical, Inc. ..... 3019 G.S. Center Rd., Wenatchee, WA 98801, 509-662-1888			●	●	●	●	●	●	●	●			●
Dairy One Forage Lab ..... 730 Warren Rd., Ithaca, NY 14850, 607-257-1272 • FAX 607-257-1350	●	●	●								●		

*E, W, S, or N indicates a portion of a state. SC indicates that a service is subcontracted.

Laboratory	Area Served*			Analyses								Other Services	
				Soil			Water			Plant Tissue	Feed		
	Oregon (OR)	Idaho (ID)	Washington (WA)	Agricultural	Environmental (heavy metals)	Environmental (pesticides, chem. cont.)	Biological (total & fecal coliform)	Chemical (pesticides)	Chemical (nitrate in drinking water)	Plant tissue	Feed	Fertilizer recomm. (FR)	Consulting (Cnslt.)
Dellavalle Laboratory, Inc. 1910 W. McKinley, Suite 110 Fresno, CA 93728-1298 559-233-6129 • FAX 559-268-8174 ndellavalle@dellavallelab.com	●	●	●	●	●	●	●		●	●	●	●	●
Food Products Laboratory, Inc. 12003 N.E. Ainsworth Circle Portland, OR 97220 503-253-9136 or 800-375-9555 FAX 503-253-9019	●	●	●		●	●	●	●	●				●
Kuo Testing Laboratories, Inc. 337 S. 1st Ave. Othello, WA 99344 509-488-0112 • FAX 509-488-0118 kuotest@atnet.net www.kuotesting.com	●	●	●	●	●	●		●	●	●	●	●	●
Laucks Testing Laboratory 940 S. Harney St. Seattle, WA 98108 206-767-5060 • FAX 206-767-5063	●	●	●		●	●	●	●	●		●		●
North Creek Analytical 20332 Empire Ave., F-1 Bend, OR 97701 541-383-9810 • FAX 541-382-7588	●	●	●		●	●	●	●	●				
Northwest Agricultural Consultants 2545 W. Falls Kennewick, WA 99336 509-783-7450	●	●	●	●					●	●	●	●	●
Oregon State University Central Analytical Laboratory Ag & Life Sciences Bldg. Rm. 3079 Corvallis, OR 97331-7306 541-737-2187 • FAX 541-737-5725	E W									●		●	
Pacific Agricultural Laboratory 12505 N.W. Cornell Rd. Portland, OR 97229 503-626-7943 • FAX 503-641-0644 sthun@pacaglab.com	●	●	●			●		●		●			●
Soil & Plant Laboratory, Inc. P.O. Box 1648 Bellevue, WA 98009-1648 13547 S.E. 27th Place, Suite 3B Bellevue, WA 98005 425-746-6665 • FAX 425-562-9531 splabnw@flash.net Oregon 503-557-4959 • FAX 503-557-0713 splabor@flash.net	S	●	●	●					●	●		●	●

*E, W, S, or N indicates a portion of a state.

Laboratory	Area Served*			Analyses								Other Services	
				Soil			Water			Plant Tissue	Feed		
	Oregon (OR)	Idaho (ID)	Washington (WA)	Agricultural	Environmental (heavy metals)	Environmental (pesticides, chem. cont.)	Biological (total & fecal coliform)	Chemical (pesticides)	Chemical (nitrate in drinking water)	Plant tissue	Feed	Fertilizer recomm. (FR)	Consulting (Cnslt.)
Soil Search Labs 42125 S. Morton Rd. Kennewick, WA 99337 509-585-8875 • FAX 509-586-0958 soilsrch@gte.net	●		●	●					●	●	●		
Soiltest Farm Consultants, Inc. 2925 Wapato Dr. Moses Lake, WA 98837 509-765-1622 • FAX 509-765-0314 www.soiltestlab.com	●	●	●	●					●	●	●	●	●
Stukenholtz Laboratory, Inc. 2924 Addison Ave. E. P.O. Box 353 Twin Falls, ID 83303-0353 208-734-3050 or 800-759-3050 FAX 208-734-3919 stuklab@mindspring.com	●	●		●	●		●	●	●	●	●	●	●
Sustainable Soils 5807 S.E. Westfork Portland, OR 97206 503-774-3945 beheveor@teleport.com	W			●	●					●		●	●
Umpqua Research Company P.O. Box 609—626 N.E. Division Myrtle Creek, OR 97457 541-863-5201 • FAX 541-863-6199 lab@urcmail.net	●	●	●		●	●	●	●	●				
USAg Analytical Services, Inc. 1320 E. Spokane St. Pasco, WA 99301 509-547-3838 • FAX 509-547-8645 certified NFTA	●	●	●	●					●	●	●	●	●
Waterlab Corp. 2603 12th St. S.E. Salem, OR 97302 503-363-0473 • FAX 503-363-8900	●			●	●	●	●		●				
Western Laboratories, Inc. P.O. Box 1020 Parma, ID 83660 208-722-6564 or 800-658-3858 FAX 208-722-6550 jptaberna@w-idaho.net	●	●	●	●						●	●	●	●
William F. Black Soil Testing 503 N. Gardner P.O. Box 317 Burlington, WA 98233 360-757-6112	●		●	●					●	●		●	●

*E, W, S, or N indicates a portion of a state.