2.0 DESCRIPTION OF THE PROPOSED ACTION

2.1 PROPOSED FACILITIES

Golden Pass proposes to construct and operate a new LNG import, storage, and vaporization terminal on the Port Arthur Channel of the SNWW in Jefferson County, Texas. In addition, Golden Pass proposes to construct a natural gas pipeline system to transport the imported natural gas from the LNG terminal to 10 planned interconnections with the existing intrastate and interstate natural gas pipeline infrastructure in Texas and Louisiana, and with the ExxonMobil Beaumont Refinery. The Project would be constructed in two phases over an approximate 60-month period. This section describes the proposed LNG terminal and pipeline system facilities, land requirements, construction procedures, schedule, environmental compliance and inspection monitoring, operation and maintenance procedures, and safety controls. Figure 2.1-1 shows the location and general of the proposed Golden Pass LNG terminal and pipeline system. Detailed maps of the pipeline system are in appendix C.

2.1.1 LNG Terminal Facilities

The LNG terminal facilities would consist of a new marine slip (two LNG ship berths with LNG ship and support vessel maneuvering area and LNG transfer system), five LNG storage tanks, and a vaporization system and vapor handling system (see figure 2.1.1-1). The terminal facility would be located on approximately 205 acres (site) of a 477-acre property (property) that Golden Pass has purchased on the western shore of the Port Arthur Channel, approximately 10 miles south of the city center of Port Arthur, Texas, and 2 miles northeast of Sabine, Texas. In the past, the site was used as a dredge material placement area (DMPA) for materials dredged during maintenance of the Port Arthur Channel.

2.1.1.1 Marine Slip (Ship Berthing and Unloading Facilities)

The ship unloading facilities would be designed in accordance with applicable codes and standards, including but not limited to those of the Oil Companies International Marine Forum (OCIMF), the Society of International Gas Tanker and Terminal Operators (SIGTTO), and the American Petroleum Institute (API). The marine transfer system, including all facilities associated with the LNG ships up to the last valve immediately before the LNG storage tanks, would comply with Coast Guard regulations for LNG Waterfront Facilities 33 CFR 127 and Executive Order 10173. The facilities would be designed to provide safe berthing for the receipt and mooring of LNG ships and to ensure the safe transfer of LNG cargoes from the ships to onshore storage facilities.

Ship Berthing and Maneuvering Area

The marine slip would consist of two protected LNG ship berths, each equipped with mooring systems and associated LNG unloading facilities, a maneuvering area to turn and move the LNG ships into the berths, as well as berthing facilities for the three tugboats used to maneuver the LNG ship into the berth. The new marine slip would be located outside of the Port Arthur Channel and separate from ship traffic in the channel. The marine terminal would be capable of unloading up to 200 ships per year or about 1 ship every 2 days, and would be designed to accommodate LNG ships with storage capacities between 125,000 m^3 and 250,000 m^3 of LNG per ship and drafts of 39 feet. Although both berths could be used for simultaneous berthing of a ship; only one ship would be unloaded at a time.

Non-Internet Public

FINAL ENVIRONMENTAL IMPACT STATEMENT FOR THE
GOLDEN PASS LNG TERMINAL AND PIPELINE PROJECT
Docket Nos. CP04-386-000 and
CP04-400-000

Figure 2.1-1
General Location Map

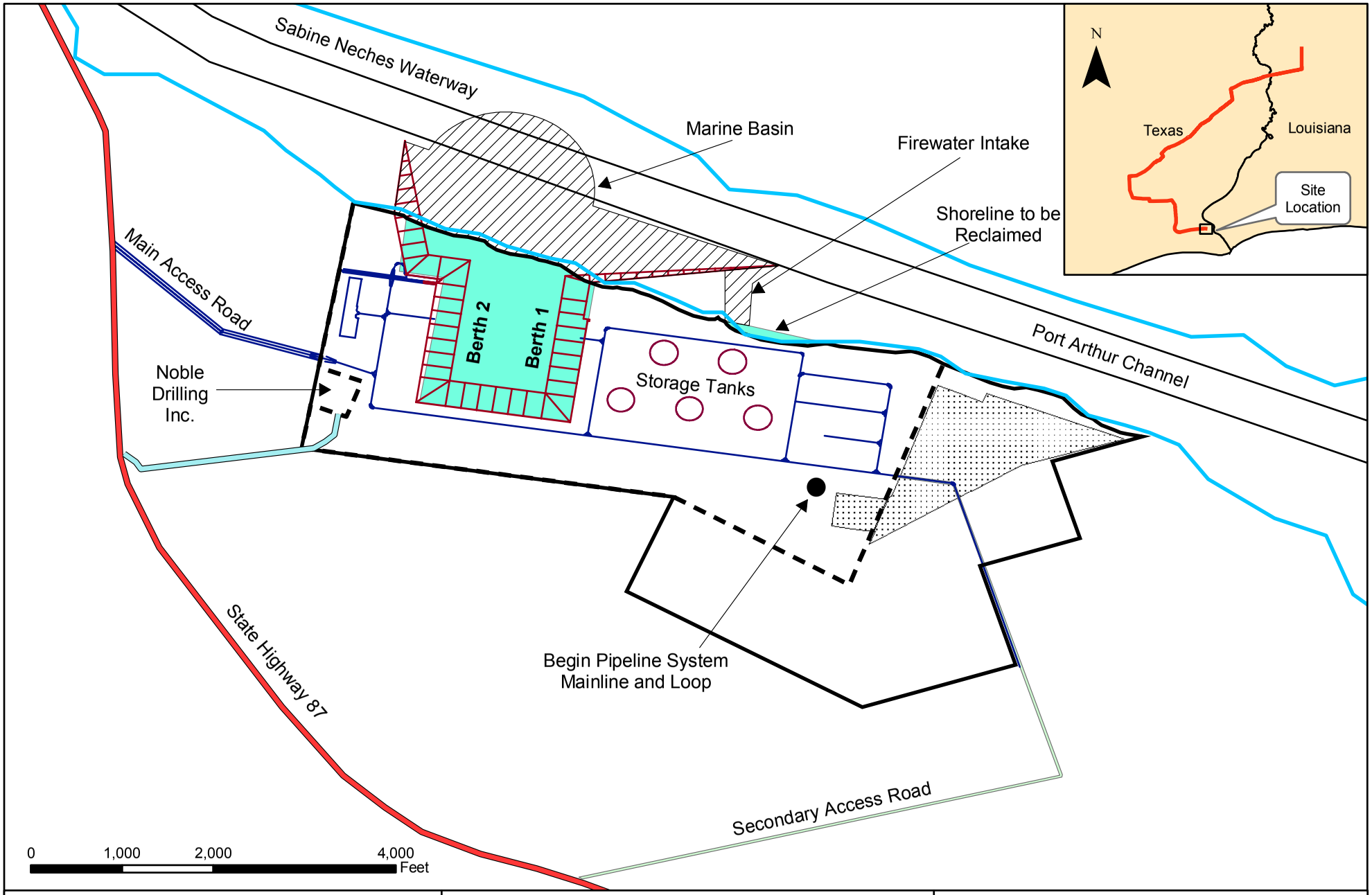

Site Boundary
Property Boundary
Dredge Area
Temporary Extra Work Space

Figure 2.1.1-1

LNG Terminal Site Plot Plan

Golden Pass LNG Terminal and Pipeline Project

Jefferson, Orange & Newton Counties, TX and Calcasieu Parish, LA

R:\GoldenPass\mxd\Figure_2_1_1-1.mxd

The marine slip and maneuvering area would be approximately 1,300 feet by 1,300 feet and would be dredged to a minimum depth of 44 feet (including 2 feet of overdredge and 2 feet of advanced maintenance) below mean lower low water (MLLW). This would match the 40-foot below MLLW depth of the SNWW maintained by the COE. The upper slopes of the newly dredged areas would be stabilized with a concrete pillow block, cable linked revetment system to prevent erosion.

Construction of the marine slip and maneuvering area would require the dredging of a total of approximately 6.3 million cubic yards (yd^3) of material, consisting of 3.9 million yd^3 of land for the berths and turning area, and 2.4 million yd^3 of shallow water between the berth and the Port Arthur Channel and the firewater intake and the Port Arthur Channel. All dredging would be completed at one time during Phase 1. Maintenance dredging is estimated to be approximately 410,000 yd^3 per year, and would be performed every two years (820,000 yd^3) or as needed. Golden Pass proposes to remove the dredge material with a hydraulic dredge and deliver this material via pipeline to a beneficial use area in the J.D. Murphree WMA and a placement facility permitted for dredged material disposal (see section 2.5.1.2).

The berth facilities would be constructed separately beginning with Berth 1 during Phase 1 and then proceeding westward to Berth 2 during Phase 2. Each berth would be approximately 1,300 feet long, designed for both port and starboard mooring with ships in each berth. Each berth would include a single-level unloading platform consisting of a reinforced concrete deck and beams supported on piles. The unloading platform would be curbed to confine LNG spillage and its surface sloped to a collection point. Drainage from the collection point would flow to an onshore spill impoundment by means of piping collection troughs.

Each berth would include three breasting dolphins to accommodate lateral loads from vessels in the berth and protect the unloading platform. Each berth would also include six mooring dolphins. Both the breasting and mooring dolphins would consist of reinforced concrete structures on piles and each would be fitted with a remotely-operated quick-release triple mooring hook and an energy-absorbing fender. The breasting and mooring dolphins would be connected to the unloading platform by steel truss-supported personnel walkways.

Each berth would consist of four 16-inch-diameter LNG unloading arms and one 16-inch vapor return arm, plus associated valves and piping, a gangway tower, firewater monitors, an anemometer, and firewater monitor pumps. Each unloading arm would be sized for an average transfer rate of 15,410 gpm. The vapor return arm would be used to return tank vapors displaced during the unloading operation back to the ship to maintain a positive ship tank pressure. The vapor return arm would be sized for 494,400 cubic feet (ft^3) per hour. One of the four unloading arms would be a hybrid arm suitable for either liquid or vapor service. This hybrid arm would be available for vapor service in the event the dedicated vapor arm is unavailable.

Individual trestles would extend from the top of the storm surge protection barrier to the edge of each of the unloading platforms. The trestle would support LNG, firewater, and utility piping and cables, including a 15-foot-wide road designed to comply with the American Association of State Highway and Transportation Officials (AASHTO) water truck load rating. The trestle would be a concrete structure supported on piles. Pipe racks, utility piping and electrical cable trays would be supported off the deck and light poles would be installed on the end of the pile caps to provide area and hazard lighting.

LNG Unloading and Transfer Facilities

LNG would be transferred from ships to the onshore LNG storage tanks using the ship's cargo pumps and berth unloading arms. LNG transfer to the LNG storage tanks would occur through 30-inch-diameter,

single-wall, 304 stainless steel transfer lines that are externally insulated with foam glass insulation. Two 30-inch-diameter lines would be provided at each berth and would be manifolded into two 30-inch-diameter lines prior to entering the LNG tank area. Spill collection troughs would be positioned beneath the LNG offloading line and would drain to the onshore spill impoundment.

After ship unloading, nitrogen gas under pressure would be used to de-inventory the LNG in the unloading arms either back to the ship tanks or to the transfer lines. During periods when there is no ship unloading operation in progress ('holding' mode), LNG would be continuously circulated through the transfer lines to maintain the lines at cryogenic temperature. This would prevent thermal shock to the piping and the generation of excessive vapor upon initiation of the next unloading operation.

2.1.1.2 LNG Storage Tanks

The LNG receiving and processing facilities would be designed, constructed, tested, operated and maintained in compliance with DOT Federal Safety Standards for LNG Facilities (49 CFR 193) as well as National Fire Protection Association (NFPA) 59A, LNG Standards, and all other applicable federal and state regulations.

The LNG would be stored in insulated, full-containment tanks each sized to store a working capacity of 155,000 m^3 (975,000 barrels) of LNG at a temperature of minus 256 degrees Fahrenheit (^oF) and a normal operating pressure of 1 to 3 pounds per square inch gauge (psig). Three tanks would be constructed during Phase 1 and two tanks during Phase 2. Each tank would be constructed of a primary inner container of 9 percent nickel steel, a secondary outer container of pre-stressed concrete, a reinforced concrete domed roof, and an aluminum insulated support deck suspended from the outer container roof over the inner container (see figure 2.1.1-2). The aluminum support deck would be insulated on its top surface with suitable insulation material, either glass fiber blanket or expanded perlite. The tanks would be designed and constructed so that both the inner primary and the outer secondary containers are completely self-supporting and capable of independently containing the stored LNG. The outside diameter of the outer tank would be approximately 252 feet and the height to the top of the dome would be approximately 173 feet above grade.

Under normal operating conditions, the primary container would contain the cryogenic liquid. The secondary container, designed to contain 110 percent of the full contents of the inner tank, would be capable of containing the cryogenic liquid, as well as the vapors resulting from product release from the inner container. The vapor pressure from the LNG would be equalized between the two containers through ports in the suspended insulation deck, with the vapors contained by the outer container. The internal design pressure of the outer container would be 4.25 psig. The space between the inner container and the outer container would be insulated with expanded perlite to allow the LNG to be stored at a temperature of -256°F while maintaining the outer container at near ambient temperature. The insulation under the inner container's base would be a cellular glass, load-bearing insulation that would support the weight of the inner container and LNG. The outer concrete container above the approximately 15-foot-high thermal corner protection system would be lined on the inside with carbon steel plates. This carbon steel liner would serve as a barrier to moisture migration to prevent moisture from the atmosphere reaching the insulation inside the outer container. This liner also would form a barrier to prevent vapor from escaping from the tanks during normal operations. The tanks would be supported on a piled foundation system. To increase the safety of the tanks, connections to the tanks would be made through the tank roof so that a failure of a line would not result in emptying the tank.

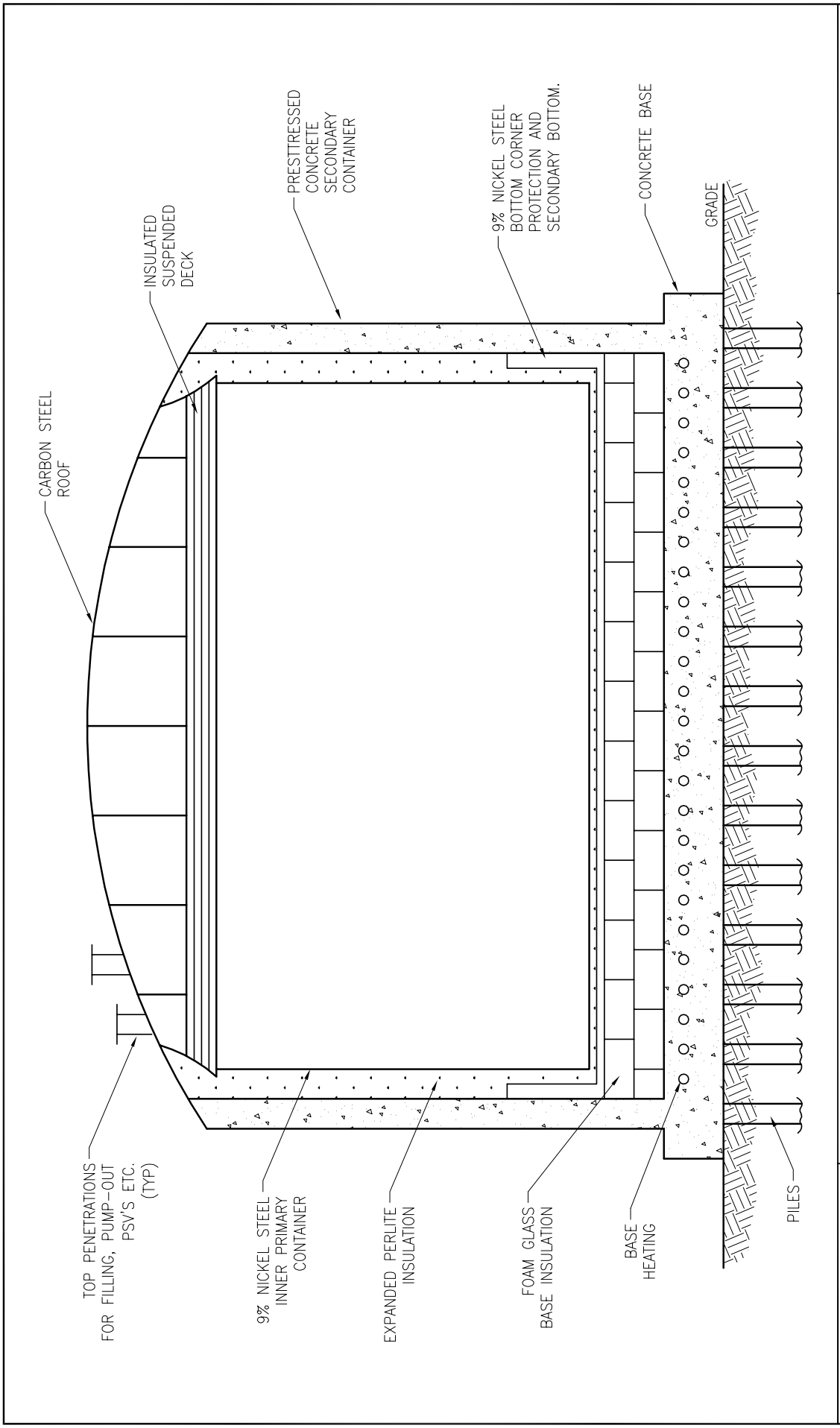

Golden Pass LNG Terminal and Pipeline Project
Jefferson, Orange & Newton Counties, TX and Calcasieu Parish, LA

Figure 2.1.1-2
Conceptual Design of LNG Full Containment Storage Tank

Each tank would be equipped with three fully submerged in-tank pumps, each sized at 3,277 gpm, to transfer LNG to the vaporizers. The LNG in-tank pumps would be mounted within columns that extend from the bottom of the tanks through the outer tank roof. The columns would allow isolation of the pumps from the tank contents for pump removal, maintenance, and re-installation.

2.1.1.3 Vaporization System

LNG from the storage tank would be vaporized and pressurized for send-out to the natural gas pipeline system. LNG would be vaporized by heat exchange using a closed-loop circulating solution of an intermediate HTF in shell-and-tube heat exchangers. The heat requirement for LNG vaporization would be accomplished by sending a portion of the HTF through gas-fired heaters. The HTF would be a 40 percent by weight propylene glycol-in-water solution. The heat source for LNG vaporization would be natural gas. Key components of the LNG vaporization and sendout system would include:

- 20 LNG booster pumps to transfer the LNG from the LNG tanks to the vaporizers (10 in Phase 1 and 10 in Phase 2), with each pump sized for a design suction flow of 1,277 gpm and a discharge pressure of 1,309 psig;
- 10 shell-and-tube heat exchangers to vaporize the LNG (five in Phase 1 and five in Phase 2), of which four exchangers for each phase would be used to meet the normal design sendout rate and the fifth would be available for backup and peak sendout;
- 6 HTF circulating pumps (three for each phase), of which two (one for each phase) would be backup;
- 8 gas-fired heaters (four for each phase), of which two (one for each phase) would be backup;
- 4 fuel gas heat exchangers (one in-service and one backup exchanger for each phase); and
- An onsite natural gas metering facility.

The LNG booster pumps would be arranged in dedicated pairs such that two pumps would provide LNG to each of the LNG vaporizers. The number of pairs running at a given time would depend on customer demand. LNG would enter tube bundles surrounded by the heated HTF in the heat exchangers and vaporized gas would exit the bundles. Heat for vaporization would be provided by burning approximately 2 percent of the send-out natural gas from the terminal. Normally, no more than 8 of the 10 heat exchangers and 6 of the 8 heaters would be operating at any one time, with the additional units used for peaking capacity or as backup. The heaters would be equipped with low nitrogen oxide (NO_X) burners and the exhaust gases would pass through a selective catalytic reduction (SCR) unit to reduce and control regulated pollutants.

The booster pumps and vaporizers would be installed within curbed spill containment areas. Drainage from these curbed containment areas would be conveyed by means of the LNG collection troughs to spill containment sumps.

2.1.1.4 Vapor Handling System

During normal non-unloading operations, a small amount of LNG from gas vapors would be emitted from the storage tanks as a result of LNG vaporization, primarily due to heat generated by the in-tank pumps and barometric pressure changes. Vapors also would be emitted from the storage tanks during ship

unloading due to displacement of tank vapors as the storage tanks are filled with LNG. Vapors or boil-off gas (BOG) from the tanks would be collected by a vapor handling system. A portion of the BOG from the ship unloading operations would be returned to the ship tank by a return gas blower to make up for the volume of liquid pumped out, thus maintaining positive ship tank pressure. BOG not returned to the ship would be compressed, condensed by direct contact with LNG and then combined with the send out LNG before being pumped up to pipeline pressure in the send out booster pumps. The key components of the vapor handling system would include:

- three reciprocating BOG compressors (one of which would serve as a backup), each sized for 141,783 ft^3 per hour; and
- a single return gas blower, sized for 437,600 ft^3 per hour.

2.1.2 LNG Ships

LNG could be shipped from a variety of sources around the world, including Algeria, Egypt, Nigeria, Qatar, Trinidad, and Venezuela. In October 2003, ExxonMobil and Qatar Petroleum (Qatar) announced an agreement to supply LNG from Qatar to the U.S. for an expected period of 25 years. Qatar's North Field has proven natural gas reserves in excess of 900 Tcf. Some of this natural gas may be transported as LNG to the Golden Pass LNG terminal for vaporization and transport through the Golden Pass pipeline system. Delivery of LNG to the U.S. is expected to begin in 2008/2009.

Although LNG ships and their operation are directly related to the use of the proposed import terminal, they are not subject to the Section 3 authorization sought in this application. The ships that transport LNG are specially designed and constructed to carry LNG for long distances. LNG ship construction is highly regulated and combines conventional ship design and equipment with specialized materials and systems designed to safely contain liquids stored at temperatures of -260°F. LNG ship design, construction, and operation will follow strict industry standards and comply with all pertinent local and international regulatory requirements, including regulations and codes set forth by the International Maritime Organization (IMO) and the Coast Guard. LNG ships arriving in U.S. ports are constructed according to the fire protection standards of the International Convention for the Safety of Life at Sea (SOLAS) and must also meet the Coast Guard requirements for fire protection systems.

The following sections present a brief overview of the main design and safety features of a typical LNG ship that may transport LNG to the Golden Pass LNG Terminal.

2.1.2.1 Profile

LNG ships have a distinctive appearance compared with other transport ships. An LNG ship has a high freeboard (*i.e.*, that portion of the ship above water), when compared with vessels such as an oil tanker, because of the comparatively low density of the cargo. Because of the high freeboard, wind velocity can adversely affect the maneuverability of the ship, particularly when traveling at slow speed, such as during docking.

2.1.2.2 Hull System

All LNG ships are constructed with double hulls, while most other liquid transport ships presently in use have single-hull construction. Double-hull construction increases the structural integrity of the hull system and provides protection for the cargo tanks in case of an accident. The space between the inner and outer hulls is used for water ballast. The International Code for the Construction and Equipment of

Ships Carrying Liquefied Gases in Bulk (Gas Tanker Code) and Coast Guard regulations require that LNG ships meet a Type IIG standard of subdivision, damage stability, and cargo tank location.

The Type IIG standard requires that the LNG ship design withstand flooding of any two adjacent compartments without any adverse effect upon the stability of the ship. Type IIG design also requires that the cargo tanks must be a minimum of 30 inches from the outer hull and a minimum distance above the bottom of the ship equal to the beam of the ship divided by 15, or 6.5 feet, whichever is less. This distance is intended to prevent damage to the cargo tanks in case of low energy-type accidents that might occur in harbors and during docking. Most large LNG ships have a distance of 10 to 15 feet between the outer hull and cargo tank.

2.1.2.3 Containment Systems

The LNG containment system on the LNG ships consists principally of the cargo tank (sometimes called a primary barrier), the secondary barrier, and insulation. The containment system also includes cargo monitoring and control and safety systems.

Three basic tank designs have been developed for LNG cargo containment: prismatic free-standing, spherical, and membrane. The earliest form of LNG containment is the prismatic free-standing tank. It consists of an aluminum alloy or 9 percent nickel steel, self-supporting tank that is supported and restrained by the hull structure. Insulation consists of reinforced polyurethane foam on the bottom and the sides, with fiberglass on the top. The spherical tank design, also known as the Moss design, uses an unstiffened, spherical, aluminum alloy tank that is supported at its equator by a vertical cylindrical skirt with the bottom of the skirt integrally welded to the ship's structure. This free-standing tank is insulated with multi-layer close-cell polyurethane panels. In the membrane containment system, the ship's hull constitutes the outer tank wall with an inner tank membrane separated from it by insulation. Two forms of membrane are commonly used: the Technigaz membrane using stainless steel and the Gas-Transport membrane using Invar.

LNG tankers are of the double-hulled design regardless of the containment system used. A double bottom and double sides are provided for the full length of the cargo area and arranged as ballast tanks, independent of the cargo tanks. The double-hulled design provides greatly increased reliability of cargo containment in the event of grounding and collisions. Further, the segregated ballast tanks prevent ballast water from mixing with any residue in the cargo tanks.

2.1.2.4 Pressure/Temperature Control

A basic goal of all LNG containment systems is to maintain the LNG cargo at or near atmospheric pressure at the boiling temperature of the LNG (about -260°F). This is accomplished using "auto-refrigeration," a phenomenon that results from the constant heat flow into the tank and the removal of the associated vapor. The vapor (or BOG) generated during auto-refrigeration in LNG ships typically ranges 0.25 to 0.15 percent (by volume) per day and is used to supplement bunker fuel in the ship's boilers. Since the Coast Guard does not permit routine venting of BOG to the atmosphere in the U.S., all LNG ships that trade in the U.S. are fitted with an internalized combustion energy system that allows the ship's boilers to consume all of the BOG to fuel the ship's steam propulsion system. As a result, LNG ships have reduced emissions of air pollutants when compared with conventional oil-fired ships.

2.1.2.5 Ballast Tanks

Sufficient ballast water capacity must be provided to permit the ship to return to the loading port safely under various sea conditions. LNG cargo tanks are not used as ballast tanks because these tanks must

contain a minimal amount of LNG in them at all times, even when "empty," so that the tanks remain at cryogenic temperatures. Consequently, LNG ships must be designed to provide adequate ballast capacity in other locations.

Ballast water tanks are arranged within the LNG ship's double hull. Since it is essential that ballast water not leak into the LNG containment system, the ballast tanks, cofferdams, and void spaces are typically coated to reduce corrosion and the potential for leakage. LNG ships are also periodically inspected to examine the coating and to renew it as necessary.

A ballast control system, which permits the simultaneous intake of ballast during cargo transfer operations, is also incorporated into each LNG ship. This allows the LNG ship to maintain a constant draft during all phases of its operation to enhance performance. Under normal operating conditions, ballast water would be taken onto the ship during LNG offloading at the LNG terminal. A typical LNG ship would take on about 11 to 14 million gallons of ballast water during offloading operations. No ballast water would be discharged into the SNWW during unloading operations.

2.1.2.6 Ship Safety Systems

The LNG ships proposed for Project use must comply with all federal and international standards regarding LNG shipping. As such, ships that transport LNG to the LNG terminal would be fitted with an array of cargo monitoring and control systems. These systems would automatically monitor key cargo parameters while the ship is at sea and during the remote-control phase of cargo operations at the marine terminal basin. The system includes provisions for pressure monitoring and control, temperature monitoring of the cargo tanks and surrounding ballast tanks, emergency shutdown of cargo pumps and closing of critical valves, monitoring of tank cargo levels, and gas and fire detection.

The LNG ships also would be fitted with many navigation and communication systems, including:

- two separate marine radar systems, including automatic radar plotting and radio direction finders;
- LORAN-C receivers;
- echo depth finders; and
- a satellite navigation system.

All LNG ships also have redundant, independent steering control systems that are operable from the bridge or steering gear room to maintain rudder movement in case of a steering system failure.

2.1.2.7 Fire Protection

All LNG ships arriving at the LNG terminal would be constructed according to structural fire protection standards contained in SOLAS. This would be done under the review and approval procedures of the Coast Guard.

LNG ships using the terminal also would be fitted with active fire protection systems that meet or exceed design parameters in Coast Guard regulations and international standards, such as the Gas Tanker Code and SOLAS, including:

- a water spray (deluge) system that covers the accommodation house and central room, and all main cargo control valves;

- a traditional firewater system that provides water to fire monitors on deck and to fire stations found throughout the ship;
- a dry powder fire extinguishing system for LNG fires; and
- a carbon dioxide (CO_2) system for protecting the machinery, ballast pump room, emergency generators, cargo compressors, etc.

2.1.2.8 Crew Qualifications and Training

All officers and crews of the LNG ships would comply with the *International Convention Standards of Training, Certification and Watch Keeping for Seafarers*. Key members of the crew must have specific training in the handling of LNG and the use of the safety equipment. Officers must receive simulator training in the handling of the ship and the cargo systems specific to the conditions at the Project site. In addition, a local pilot from the Sabine Pilots Association would board each ship and guide it through the SNWW Channel.

2.1.2.9 Ship Selection

The specific identity of LNG ships that would offload at the Golden Pass LNG Terminal would depend on the commercial terms of the LNG purchase agreements. Transportation could be provided by either the LNG buyer or supplier. The different contractual arrangements for LNG transport can result in ships of different sizes and countries of origin being used to transport LNG to the terminal. The Golden Pass LNG terminal would be designed to accommodate ships with cargo capacities of up to 250,000 m^3, an overall length of about 1,132 feet, a beam (width) of about 180 feet, and a loaded draft of about 39 feet.

Ships arriving at the LNG terminal would comply with the Coast Guard regulations for LNG ships. This compliance is demonstrated by the operator of the LNG ship having proper certificates authorizing the transport of LNG as follows:

- U.S. Flag LNG Ship – The Coast Guard Certificate of Inspection must be valid and endorsed for the ship to transport LNG (46 CFR 154, 1979).

- Foreign Flag LNG Ship – The ship must have a valid Certificate of Compliance issued by the Coast Guard. The certificate is issued after the ship has proved that it complies with the Coast Guard regulations and after it has been inspected satisfactorily by a Coast Guard Marine Safety Officer (46 CFR 154, 1979).

Both U.S. and foreign flag ships must be inspected annually by the Coast Guard and the flag country. A Coast Guard Certificate of Inspection is required every 2 years. Coast Guard officers from the Marine Safety Unit, Port Arthur, Texas, may board the LNG ships arriving in the SNWW Channel to perform a security inspection and to assure compliance with safety standards. Golden Pass would continually monitor ship operations to ensure that operations are in accordance with its established procedures and that ships are maintained to all standards.

2.1.3 Pipeline System

2.1.3.1 Mainline, Loop, and Beaumont Lateral

Golden Pass also proposes to construct a natural gas pipeline system consisting of approximately 122.4 miles of natural gas pipeline in Jefferson, Orange, and Newton Counties, Texas and Calcasieu Parish, Louisiana, consisting of the:

- Mainline – Approximately 77.8 miles of 36-inch-diameter pipeline extending from the LNG terminal near Sabine Pass, Texas, generally west, north, and then northeast to an interconnection with an existing Transco interstate pipeline near Starks, Louisiana;

- Loop – Approximately 42.8 miles of 36-inch-diameter looping pipeline that would be installed adjacent to the Mainline between mileposts (MP) 0.0 and 42.8, from the LNG terminal near Sabine Pass, Texas, to an interconnection with the AEP Texoma pipeline near Beaumont, Texas;

- Beaumont Lateral – Approximately 1.8 miles of 24-inch-diameter lateral pipeline extending from the Mainline and Loop at MP 38.2, near Beaumont, Texas, to industrial customers including the ExxonMobil Beaumont Refinery complex; and

- Associated pipeline facilities (pig launchers/receivers, block valves) and metering facilities at interconnections with up to 10 existing intrastate and interstate pipelines, and the ExxonMobil Beaumont Refinery.

Figure 2.1-1 is a general location map for the Golden Pass pipeline system. More detailed location maps are included in appendix C.

The Mainline and Loop would be constructed adjacent to existing pipeline, railroad, road, or powerline rights-of-way for approximately 14.4 miles, or about 34 percent of the total length of 42.8 miles. From the AEP Texoma Meter Station, the Mainline would be constructed adjacent to existing rights-of-way for approximately 32.9 miles, or approximately 94 percent of the remaining 35 miles. The Beaumont Lateral would be constructed adjacent to existing railroad and powerline rights-of-way for approximately 1.3 miles, or approximately 72 percent of the total length of 1.8 miles.

2.1.3.2 Aboveground Facilities

The Golden Pass pipeline system also would include aboveground facilities, consisting of mainline valves (MLV), pig launchers and receivers, and meter stations at the planned interconnects with the existing intrastate and interstate pipelines and the ExxonMobil Beaumont Refinery (see table 2.1.3-1). The MLVs would be installed on the buried pipeline with the blowdown valves and manual valve operator extending aboveground within a fenced area in the permanent right-of-way that would measure 75 feet by 75 feet for the Mainline and Loop, and 50 feet by 75 feet for the Mainline. The meter stations and interconnects, and associated MLVs, pig launchers and receivers, would be constructed along the pipeline system within fenced sites ranging from approximately 70 to 225 feet by 100 to 200 feet depending on the facilities and other topographic or environmental constraints.

TABLE 2.1.3-1

Aboveground Pipeline Facilities

Milepost	State County/ Parish	Facility
Mainline and Loop		
0.0	Jefferson, TX	Mainline and Loop beginning MLVs and pig launchers
1.2	Jefferson, TX	NGPL and Centana Meter Stations and Interconnects
18.5	Jefferson, TX	Mainline MLV 1 and Loop MLV 1A
32.6	Jefferson, TX	KM Texas Meter Station and Interconnect
34.6	Jefferson, TX	KM Tejas Meter Station and Interconnect
38.2	Jefferson, TX	Beaumont-Port Arthur Meter Station, Mainline MLV 2 and Loop MLV 2A and pig launcher for the Beaumont Lateral a/
42.8	Orange, TX	AEP Texoma Meter Station and Interconnect, Loop ending MLV and pig receiver
Mainline		
44.0	Orange, TX	Florida Gas Meter Station and Interconnect
54.1	Orange, TX	Mainline MLV 3
60.6	Orange, TX	Channel Meter Station and Interconnect
65.2	Newton, TX	Mainline MLV 4
72.8	Calcasieu, LA	Tennessee Gas Meter Station and Interconnect
75.2	Calcasieu, LA	TETCO Meter Station and Interconnect
77.8	Calcasieu, LA	Transco Meter Station and Interconnect, Mainline ending MLV and pig receiver
Beaumont Lateral		
1.8	Jefferson, TX	MLV and pig receiver

a/ The Beaumont-Port Arthur Meter Station would be at MP 0.0 of the Beaumont Lateral.

The MLVs segment the pipeline for safety, and for operations and maintenance purposes, in accordance with DOT regulations. Golden Pass states that additional MLVs may be installed at intermediate locations along the Mainline and Loop to comply with population classifications required in the DOT safety regulations. Currently, Golden Pass estimates that 92.5 percent of the pipeline system is located in low density population areas, or class I locations (see section 4.13.7.1). The MLVs are used to shut down gas flow in the pipeline and also allow for surface access to the pipeline. They would be installed on the buried pipeline, with the blowdown valve and manual valve operator extending aboveground within a fenced, gated, and locked area within the permanent pipeline right-of-way, either on their own or within an associated meter station facility. Each valve would be capable of being remotely monitored and controlled from a central control facility via the Supervisory Control and Data Acquisition (SCADA) system.

The pigging facilities would be designed to accommodate intelligent pigs to monitor the integrity of the pipeline. A pig launcher would be installed at the beginning of the Mainline and Loop with the associated pig receiver located at the end of each pipeline. The launcher and receiver for the Beaumont Lateral would be configured to accommodate temporary installation of a launcher and receiver at the beginning and end of the lateral.

The meter station and interconnects would include meter runs, consisting of a custody-transfer flow meter, pressure regulator, isolation block valves, and associated instrumentation and controls, to measure the flow of natural gas from the Golden Pass pipeline system to the customer. Each of the ten interconnect sites (for a total of 11 interconnections) would consist of one or more meter runs located

inside a fenced and gated site, and would be constructed along the Mainline and/or Loop. The meter station and interconnect sites would be located as close as practicable to the actual intersection of the Mainline and/or Loop and the existing customer pipelines to keep the length of the interconnecting lateral pipelines to a minimum. With the exception of the Beaumont Lateral, the customers would construct, own, and operate the interconnecting lateral pipelines downstream of the interconnect sites (see section 1.5). Golden Pass would construct, own, and operate the Beaumont Lateral from the Beaumont-Port Arthur Meter Station and Interconnect to the ExxonMobil Beaumont Refinery gas supply system.

A typical meter station and interconnect site would include a communications facility for each interconnection. Communications service would be provided for voice communications and SCADA backup. Each site would include electric power for lighting, ventilation, and control equipment.

To the extent practicable, the aboveground facilities (meter station and interconnect sites, MLVs, and launcher/receivers) would be located near existing roads. Entrance drives would be installed from the existing roads as part of facility construction, but would not be of any significant length except for the 750-foot-long entrance road into the Channel Meter Station and Interconnect site.

2.2 LAND REQUIREMENTS

A total of 2,007.7 acres of land and open water would be affected during construction of the Project as summarized in table 2.2-1, sections 2.2.1 and 2.2.2 below, and as described in greater detail in section 4.8.1 of this EIS.

2.2.1 LNG Terminal Facilities

Golden Pass would use 245 acres of the 477-acre property for construction of the proposed LNG terminal and an additional 20.6 acres outside of the property for new access roads to the site. This would include approximately 63.9 acres of land that would be converted to open water for the new marine slip. Of the 245 acre area, 40 acres would be used as temporary workspace during construction. The 40-acre temporary workspace would include 11.0 acres for parking, 15.0 acres for an equipment laydown area with warehouse and tool room, 2 acres for construction offices/trailers, and 12.0 acres for staging areas for other construction activities. Following construction, 205 acres (plus 2 acres of reclaimed shoreline) would be fenced to permanently enclose the LNG terminal components. In addition, 20.6 acres of land outside of the property boundary would be maintained as permanent easements for the primary and secondary access roads. Approximately 108.8 acres of estuarine emergent and palustrine emergent wetlands would be permanently affected as a result of construction and operation of the LNG terminal.

2.2.2 Pipeline System

2.2.2.1 Right-of-Way and Temporary Workspace

Construction of the Golden Pass pipeline system would disturb a total of approximately 1,742.1 acres of land, including the construction right-of-way and temporary extra workspace areas (1,594.1 acres), access roads (46.7 acres), pipe storage/contractor contractor yards (94.1 acres), and aboveground facilities (7.2 acres). Approximately 290.2 acres of this total would be wetlands.

TABLE 2.2-1

Summary of Land Requirements

Facility	Land and Open Water a/ Affected During Construction (acres)	Land and Open Water a/ Affected During Operation (acres)
LNG terminal facilities		
Marine slip	63.9	63.9
Buildings	1.2	1.2
Equipment and open areas	89.4	91.4 b/
Dike wall and slope	50.5	50.5
Primary off-property access road	3.4	3.4
Secondary off-property access road	17.2	17.2
Temporary construction area	40.0	0.0
Sub-Total: LNG terminal	**265.6**	**227.6**
Pipeline System		
Mainline and Loop	1,568.4 c/	693.1
Beaumont Lateral	25.7 c/	10.8
Aboveground facilities d/	7.2	7.2
Pipe storage and contractor yards e/	94.1	0.0
Access roads f/	46.7	0.7
Sub-Total: Pipeline system	**1,742.1**	**711.8**
TOTAL: Project	**2,007.7**	**939.4**

a/ A total of 63.9 acres of land would be converted to open water for the marine berth. Open water affected by pipeline construction is tabulated in table 4.8.1-1 in section 4.8.1, and is included here as a component of the total land requirements for the facilities.
b/ Includes 2 acres of reclaimed shoreline within the LNG terminal site.
c/ Includes construction right-of-way and extra workspace.
d/ See table 4.8.1-3 in section 4.8.1.
e/ See table 4.8.1-4 in section 4.8.1.
f/ See table 4.8.1-5 in section 4.8.1. Permanent impacts include only new permanent access roads.

Construction Right-of-Way

Golden Pass proposes to use a variety of construction right-of-way widths depending on the pipeline(s) being installed (Mainline and Loop between MPs 0.0 and 42.8, Mainline between MPs 42.8 and 77.8, and Beaumont Lateral), the surface conditions encountered (upland, saturated/unsaturated wetlands, flooded/submerged land, or open water), whether adjacent to an existing pipeline right-of-way, and other factors. Approximately 1,462.2 of the total 1,594.1 acres of land disturbed for the construction work areas would be used for the construction right-of-way. The basic proposed construction rights-of-way widths would include the following configurations based on the construction method used. The construction methods are described in more detail in section 2.5.2; appendix D contains typical right-of-way cross-sections.

Uplands:

- A 125-foot-wide construction right-of-way for the Mainline and Loop, with a 25-foot separation between the Mainline and Loop; and
- A 100-foot-wide construction right-of-way for the Mainline alone and the Beaumont Lateral.

Agricultural Land:

- A 145-foot-wide construction right-of-way (including 20 feet of extra workspace for topsoil segregation) for the Mainline and Loop, with a 25-foot separation between the Mainline and Loop; and
- A 120-foot-wide construction right-of-way (including 20 feet of extra workspace for topsoil segregation)for the Mainline alone and the Beaumont Lateral.

Unsaturated Wetlands:

- A 110-foot-wide construction right-of-way for the Mainline and Loop where the crossing length is less than 100 feet;
- A 125-foot-wide construction right-of-way for the Mainline and Loop where the crossing length is greater than 100 feet;
- An 85-foot-wide construction right-of-way for the Mainline alone and Beaumont Lateral where the crossing length is less than 100 feet; and
- A 100-foot-wide construction right-of-way for the Mainline alone and Beaumont Lateral where the crossing length is greater than 100 feet.

Saturated Wetlands (Marsh Construction):

- A 115-foot-wide construction right-of-way to accommodate marsh buggy excavation and push-pull of the Mainline and Loop;
- A 90-foot-wide construction right-of-way to accommodate marsh buggy excavation and push-pull of the Mainline alone and the Beaumont Lateral; and
- A 250-foot-wide construction right-of-way (including two 25-foot-wide workspaces for spoil storage) for a special construction technique in the J.D.. Murphree WMA that would require excavation equipment on the existing levees and a push-pull of the Mainline and Loop.

Flotation Channel to Shell Lake:

- A 250-foot-wide construction right-of-way for excavation of a temporary channel across marsh to provide access for construction equipment from the Intracoastal Waterway to Shell, Keith, and Johnson Lakes.

Open Water (Keith, Johnson, and Shell Lakes):

- A 375-foot-wide construction right-of-way for the Mainline and Loop in water depths less than 8 feet deep, with a 75-foot separation between the pipelines; and
- A 200-foot-wide construction right-of-way for the Mainline and Loop in water depths greater than 8 feet deep, with a 75-foot separation between the pipelines.

Horizontal Directional Drill (HDD): [1]

- A 225-foot-wide construction right-of-way for an HDD for both the Mainline and Loop; and
- A 150-foot-wide construction right-of-way for an HDD of one pipeline.

[1] Because the HDD involves installation of the pipeline(s) by drilling beneath the waterbody or land surface, there would be minimal land disturbance along the path of the HDD.

Following construction, Golden Pass would maintain a permanent right-of-way for operation of the pipeline(s). As proposed, Golden Pass would use 50 feet for a single pipeline (Mainline north of MP 42.8 and Beaumont Lateral) and 75 feet where the Mainline and Loop are 25 feet apart. In open water and along the HDDs where the Mainline and Loop are separated by 75 feet, Golden Pass would use a 125-foot-wide permanent right-of-way. Generally, there would be a 50-foot separation between the proposed pipeline and an adjacent foreign pipeline. Approximately 703.9 acres of land would be retained for the permanent rights-of-way. Figure 2.2.2-1 shows the typical construction and permanent right-of-way for the Mainline and Loop; figure 2.2.2-2 shows the typical construction and permanent right-of-way for the Mainline north of MP 42.8 and the Beaumont Lateral. Actual dimensions and the configuration (*e.g.*, spoil storage, equipment travel lane) within the construction right-of-way would vary depending on site-specific conditions at the time of construction and construction methods used.

Additional Temporary Workspace

Golden Pass identified a total of 131.9 acres of temporary extra workspace that would be required for construction at wetland, waterbody, HDD, foreign pipeline and road/railroad crossings; and for topsoil segregation, sharp bends in the pipeline, truck turnarounds, staging and fabrication areas. The locations, sizes, and land use of the identified temporary extra workspaces and staging areas are listed in table F-5 in appendix F.

2.2.2.2 Access Roads

Golden Pass proposes to use 27 roads, totaling approximately 17.6 miles, to provide access to the construction right-of-way for construction materials and equipment. Of these, six would be new roads that would be less than 1 mile in length. Two of the new access roads would be permanent and would serve as the permanent access roads to the KM Texas and Channel Meter Stations and Interconnects, respectively. The remaining four new roads would consist of timber construction mats or board roads that would be removed following construction. The existing access roads would be improved by grading or adding gravel, as required, to support movement of construction equipment and materials. Following construction, all temporary access roads would be returned to their original land use, ground cover, and condition (or better). Use of the access roads would temporarily affect about 46.7 acres of land during construction. The access roads are shown on the maps in appendix C and are listed in table 4.8.1-5.

2.2.2.3 Pipe Storage/Contractor Yards

Golden Pass has identified six sites, ranging in size from approximately 5.4 to 40.1 acres, for temporary use as pipe storage yards, contractor office and equipment/tool room trailers; construction equipment and employee parking; equipment laydown, warehouse, and maintenance areas; and staging areas for other temporary construction activities. Depending upon the condition of the sites and their current use, some surface grading, drainage improvements, placement of surface materials (e.g. crushed rock), and internal roadways may be required.

Pipe storage and contractor yards would temporarily affect a total of approximately 94.1 acres during construction. All sites would be returned to their original land use, ground cover, and condition (or better) following construction. The location of each yard is shown on the maps in appendix C. The size and current land use are listed in table 4.8.1-4 in section 4.8.1.

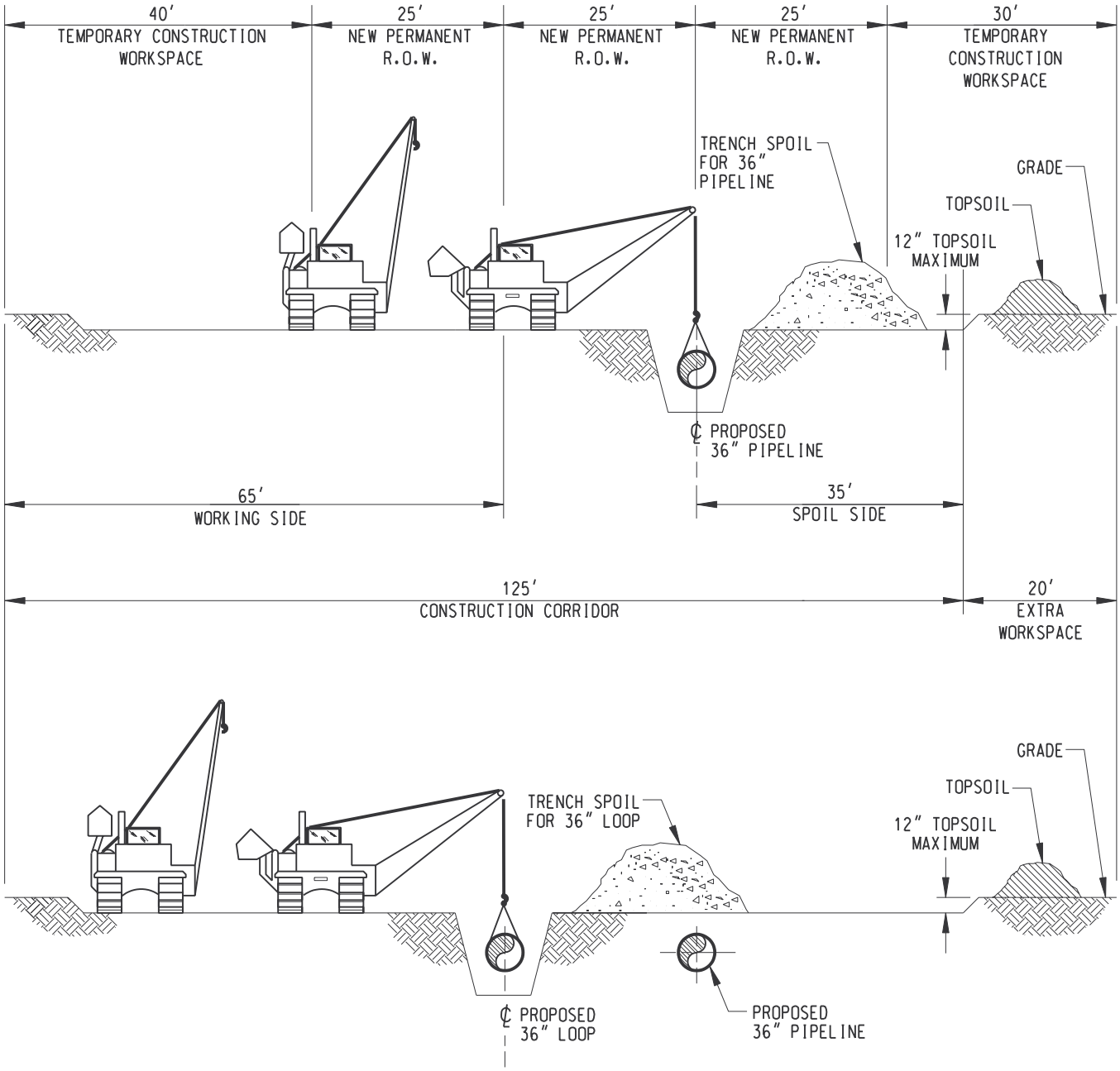

PROFILE

Figure 2.2.2-1
Mainline and Loop (MPs 0.0 - 42.8)
Typical Right-of-Way Cross Section

Golden Pass LNG Terminal and Pipeline Project

Jefferson, Orange & Newton Counties, TX and Calcasieu Parish, LA

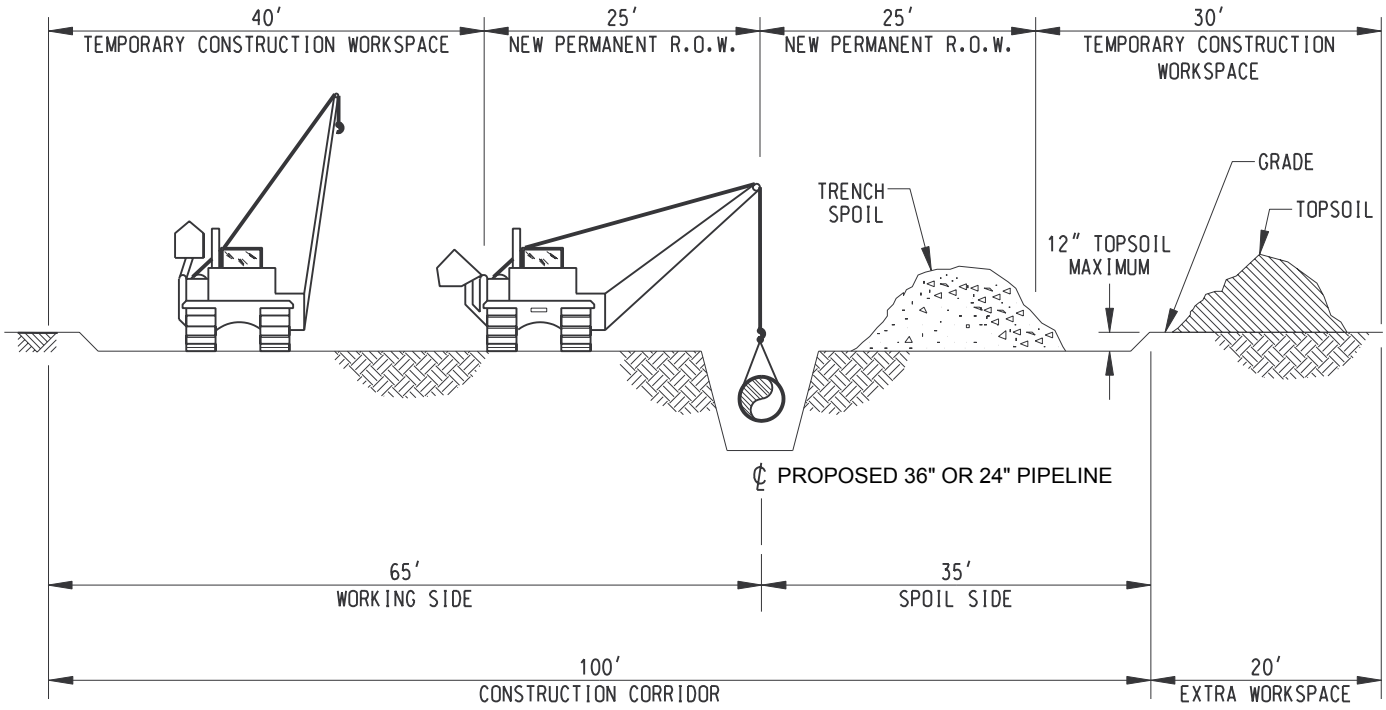

Figure 2.2.2-2
Mainline (MPs 42.8 - 77.8) and
Beaumont Lateral
Typical Right-of-Way Cross-Section

Golden Pass LNG Terminal
and Pipeline Project
Jefferson, Orange & Newton Counties, TX
and Calcasieu Parish, LA

2.2.2.4 Aboveground Facilities

Construction and operation of the Meter Station and Interconnect sites, and associated MLVs and pig launchers/receivers, would permanently convert 7.2 acres of land from current use to industrial use. Not included in this total are the MLVs that are not contained within the meter station and interconnect sites (MP 18.5 on the Mainline and Loop, and MPs 54.1 and 65.2 on the Mainline). The acreage for these facilities is included within the permanent right-of-way for the pipeline(s).

2.3 CONSTRUCTION SCHEDULE

Golden Pass proposes to construct the LNG terminal facility in two phases over an approximate 60-month period. Phase 1 would begin in mid-2005 and is expected to be completed in a little less than 3 years for an annual average capacity of 1.0 Bcfd in 2008. The start of Phase 2 would depend on commercial supply and demand decisions and would increase the annual average capacity from 1.0 to 2.0 Bcfd. Construction of the pipeline system is expected to take approximately 12 months, beginning in April 2007 and ending before completion of Phase 1 of the LNG terminal.

The construction labor force for the land-based LNG terminal is estimated to average 440 workers over the construction period with a peak labor force of 941 workers in the third year of construction. The marine construction labor force is estimated to average 58 workers with a peak labor force of 96 workers. Approximately 70 percent of the construction workforce would be hired locally. The total number of full-time positions that would be created to maintain and operate the LNG terminal and related marine facilities would average approximately 60 workers. These would be professional and skilled positions and are expected to be hired from the local area.

The pipeline would be installed using an average construction workforce of about 250 workers over the 12-month construction period, with a peak workforce of about 325 workers. About 70 percent of the workforce is expected to be hired locally. Operation of the pipeline would require about 5 full-time workers.

2.4 ENVIRONMENTAL COMPLIANCE AND MITIGATION MONITORING

To ensure that construction of the Project would comply with applicable mitigation measures and the requirements of federal and state permits, Golden Pass would provide its contractors with a Construction Drawing Package containing pipeline, plant, and equipment drawings designated as being approved for construction. The Construction Drawing Package would include pertinent agency correspondence and documentation, as well as copies of permits and related drawings.

Golden Pass would require its contractors to install the proposed facilities according to Golden Pass' standard specifications, the Construction Drawing Package, the Project-specific Storm Water Pollution Prevention Plan (SWPPP), the Spill Prevention Control and Countermeasure Plan (LNG SPCC Plan and Pipeline SPCC Plan), and the FERC's *Upland Erosion Control, Revegetation and Maintenance Plan* (Plan) and *Wetland and Waterbody Construction and Mitigation Procedures* (Procedures). The LNG and Pipeline SPCC Plans, and the LNG SWPPP[2] are included in appendix E. Our Plan and Procedures are available on the FERC Internet website at http://www.ferc.gov/industries/gas/enviro/guidelines.asp.

Golden Pass and the construction contractors would jointly develop the final SWPPP to ensure the proposed controls adequately address the materials to be used and the proposed construction methods, and

[2] On April 19, 2005, Golden Pass filed a revised SWPPP/SPCC to comply with the provisions of the EPA's Construction General Permit.

to ensure contractor acceptance of the plans. All plans would be filed with the FERC prior to construction as part of the implementation plan for Project construction.

Golden Pass would employ at least one Environmental Inspector (EI). The EIs duties would be full-time and consistent with those contained in section II.B, Responsibilities of the Environmental Inspector, of the our Plan. These responsibilities include ensuring that the environmental conditions attached to all permits and authorizations are complied with, training Project personnel about environmental requirements, and reporting compliance status to the contractors, Golden Pass, the FERC, and other agencies as required. In compliance with our Plan, the EI(s) would report directly to the Chief Inspector and would have authority to stop work or require other corrective action(s) to achieve environmental compliance.

Golden Pass also proposes to hire and fund a third-party contractor during construction of the pipeline system to work under the direction of the FERC staff for the purpose of monitoring compliance with its proposed mitigation measures and the applicable environmental conditions identified in section 5.2 of this EIS. To assist Golden Pass in identifying an appropriate third-party contractor, we recommend that:

- **Golden Pass develop a draft monitoring program for the third-party compliance monitor that includes:**

  a. **the employment by a third-party contractor of at least one full-time monitor per construction spread;**

  b. **the employment by a third-party contractor of a part-time compliance manager to direct and coordinate with the monitors; manage the daily and weekly reporting system, and variance requests; and provide technical support to the FERC staff;**

  c. **a systematic approach for the review and approval by the compliance manager and monitors of variances for certain construction activities as may be required by Golden Pass based on site-specific conditions.**

  d. **maintenance of files for the daily and/or weekly inspection reports submitted by both the third-party monitors and Golden Pass' EIs; and**

  e. **a discussion of how this monitoring program can incorporate and/or be coordinated with monitoring or reporting that may be required by other federal and state agencies.**

  This draft monitoring program and proposals from potential contractors to provide monitoring services should be filed with the Secretary for review and approval by the Director of the Office of Energy Projects (OEP) prior to construction of the pipeline system.

2.5 CONSTRUCTION PROCEDURES

This section describes the general construction procedures proposed by Golden Pass for construction of the LNG terminal and pipeline system. Section 4.0 contains more detailed discussions of proposed construction, mitigation, and restoration procedures as well as additional measures that we are recommending to mitigate environmental impacts.

2.5.1 LNG Terminal Facilities

Construction at the site would include installation of temporary onsite facilities needed for construction, such as site offices, parking, and tool room, warehouse, and laydown areas. The permanent facilities

(LNG tanks, marine terminal basin, vaporization process area, piperacks, administration buildings, etc.) would be installed on steel or concrete piles that would be driven into the ground at an estimated average depth of about 130 feet for concrete piling and 180 feet for steel piling.

2.5.1.1 Site Work

Site work would include:

- Site Preparation – The footprint of the site would be stripped of the top 8 inches of soil (approximately 201,000 yd^3), which consists of old dredged materials. Depending on the nature of the stripped material, some may be transported from the site and placed in a COE approved, confined-site Placement Area (PA), either PA-8 or PA-9, disposed offsite in an approved disposal area, and/or redistributed to lower elevation areas within the site. Golden Pass states that it would minimize the amount of material transported offsite and maximize use of soil redistributed onsite.

- Site Filling and Compaction – Following removal/redistribution of the top 8 inches of soil, 603,700 yd^3 of clean structural fill would be brought to the site to achieve a finished grade elevation of 8 feet national geodetic vertical datum (NGVD).

- Installation of the Perimeter Storm Surge Barrier – The perimeter storm surge protection barrier would encircle the LNG facility and would be constructed with a finished top-of-berm elevation of 16 feet NGVD, requiring approximately 116,000 yd^3 of imported fill.

- Construction of Access, Perimeter, and In-plant Roads – An existing road from SH 87 to the Noble Energy facility would be used temporarily for access to the LNG site by light vehicles until the primary access road is completed.

  The primary access road would be a new approximately 2,475-foot-long, asphalt-surfaced road that would be constructed from SH 87 to the main gate at the west end of the site within a 60-foot-wide easement. The road would be comprised of 22 feet of asphalt-surface roadway, and 3 feet (each side) of maintained (roadbase) shoulder. On its north side, an additional 1 foot of vegetated ground would extend from the maintained shoulder, and an approximate 15-foot-wide earthen drainage ditch would extend to the north from the edge of the 1-foot vegetated ground strip. On its south side, structural fill material would slope down from the edge of the maintained shoulder, and would cover a horizontal distance of approximately 6 feet (on average) from the edge of the maintained shoulder to the existing ground surface. Approximately 16,100 yd^3 of fill would be used as the base for the primary access road. The waterline and nonjurisdictional powerline would be installed within the remaining easement along the primary access road.

  The secondary access road would be a new, 7,500-foot-long, 28-foot-wide maintained road. It would be installed within a 100-foot-wide easement and would include slopes down each side of the maintained road base for a horizontal distance of approximately 6 feet (on average) from the edge of the road base to the existing ground surface. Approximately 45,000 yd^3 of fill would be used as the base for the secondary access road.

  Golden Pass would acquire easements for the portions of these access roads that would be located on land outside of the Golden Pass property.

A third road bordering the property fenceline would be constructed to allow vehicle access to the fenced perimeter of the site. The road base for this road would require approximately 15,100 yd^3 of fill. In addition, approximately 31,300 yd^3 of fill would be imported for construction of other in-plant roads.

- Reclamation of the Shoreline – Approximately 2 acres of shoreline would be reclaimed adjacent to the northeast section of the LNG storage tank area requiring approximately 24,000 yd^3 of imported fill.

- Aggregate – Approximately 89,500 yd^3 of aggregate would be imported for placement in construction laydown areas.

Concrete and clean fill material would be delivered to the LNG site by truck from nearby locations on an as-needed basis. Golden Pass anticipates installing a concrete batch plant on or near the site to reduce or eliminate the need for concrete to access the site on the existing roadway network. However, Golden Pass estimates that approximately 110,000 yd^3 of concrete would be imported to the site over the course of the construction period. For landside facilities, concrete would be placed by land-based equipment. For waterside facilities, concrete would be placed by a crane barge. Light loads of supplies to support marine construction and landside construction would be shipped from the place of origin to an appropriate local port (*e.g.,* Sabine, Port Arthur, Lake Charles, Houston, Beaumont or New Orleans) and unloaded for final transportation to the site by truck. Marine construction equipment and major marine and landside construction materials that cannot be efficiently transported by truck would be delivered to the LNG site on cargo barges and offloaded to the crane barges in the marine terminal basin. A 1,000-ton deck barge (approximately 40 x 140 ft x 10 ft) would be located alongside each of the two crane barges for material receipt and temporary working storage. No barges would be moored in the SNWW and there would be no impact to shipping in the channel.

Temporary erosion and sediment control devices would be installed and maintained from the inception of initial land disturbance activities until completion of construction activities and the installation of permanent erosion control measures. All areas not used for plant equipment or covered by gravel or other material would be seeded and revegetated in compliance with the SWPPP, and the Plan and Procedures.

2.5.1.2 Marine Terminal Basin

The marine terminal basin would consist of an unloading slip and two berths. The slip would be approximately 1,300 feet by 1,300 feet and dredged to a depth of 44 feet below MLLW to include 2 feet of overdredge and 2 feet of advanced maintenance. Each berth would be about 1,300 feet long and designed for both port and starboard mooring. Dredging for the slip, the shallow water from the slip to the Port Arthur Channel, and the berths would be completed during Phase 1. The facilities for Berth 1 would be installed in Phase 1 and for Berth 2 in Phase 2.

Marine Dredging

In its comments on the draft EIS (April 19, 2005), Golden Pass stated that it would not excavate and truck out the top 6 feet of soil from the marine basin, but would include these soils with the dredge material. As a result a total of approximately 6.3 million yd^3 of dredged material would be removed from the site and adjacent waterway, consisting of about 3.9 million yd^3 of materials from the shore and about 2.4 million yd^3 of materials from in the shallow, open water between the shore and the Port Arthur Channel. Based on geotechnical testing, Golden Pass estimates that the dredge materials would consist of 1.7 million yd^3 of fine sand (27 percent) and 4.6 million yd^3 of soft, very soft, and sandy clays. Dredging would begin at the edge of the Port Arthur Channel and continue into the area of Berth 1 and then west

into the area for Berth 2. Dredging of the marine basin would take approximately 54 weeks, not including 3 weeks to mobilize and 2 weeks to demobilize dredging equipment. In its comments on the draft EIS (April 18, 2005), Golden Pass stated that, in response to Coast Guard concerns about the impact of dredging on shipping in the Port Arthur Channel, it will require its marine dredge contractor to coordinate closely with the Coast Guard. This would involve a meeting between the Coast Guard, Golden Pass, and the dredging contractor before beginning dredging operations. The meeting would facilitate necessary communications and establish coordination procedures to ensure shipping safety and compliance with Coast Guard requirements during dredging operations.

The slip would be dredged with a hydraulic cutterhead dredge. An 80-ton capacity crane, in conjunction with a hydraulic excavator, would shape the upper slopes of the dredged area and install a concrete pillow block, cable linked revetment system to prevent erosion. Mats would be pre-assembled into full slope lengths, then attached to previous segments, and secured by means of screw anchors to prevent slippage and dislocation. A 30-inch hydraulic dredge would pump the dredged material to the designated disposal area. Dredging would continue 24 hours a day, 7 days per week. Floating and submerged discharge pipelines would be used as required to maintain surface vessel traffic. All floating equipment would be directionally lighted and manned 24 hours per day.

Golden Pass proposes to transport approximately 1.2 million yd^3 of the dredge material for beneficial use to reestablish marsh vegetation in a degraded (open water) marsh in the J.D. Murphree WMA. The remainder of the dredged material would be transported to an approved COE confined upland PA, either PA-9 on the north side of the Intracoastal Waterway or PA-8 on the northeast side of Pleasure Island. PA-9 is maintained by the Jefferson County Waterway and Navigation District (Jefferson County WND) and is the smaller of the two PAs. PA-8 is maintained by the COE and is currently used for dredge material disposal. It is the largest of the disposal sites at approximately 3,000 acres, has sufficient capacity to contain all of the initial dredge material, and is the preferred PA. Figure 2.5.1-1 shows the location of the material disposal areas and the pipeline route that would be used to transport the material to the J.D. Murphree beneficial use site and either PA-8 or PA-9.

Installation of the Unloading Platforms

The unloading platforms, breasting and mooring dolphins, and access trestle would consist of reinforced concrete structures on piles. Pile driving would start with the trestle piles on Berth 1; continue through the platform, and then work outwards driving the dolphin piles and the intermediate walkway support piles. Upon completion of the piles for Berth 1, the pile driver would repeat the process for Berth 2. A maximum 200-ton capacity crawler crane would be outfitted with 180 linear feet of fixed leaders and a hydraulic pile spotter. The crane would stand on timber crane mats and be secured to the deck. The barge would be approximately 40 feet wide by 140 feet long by 10 feet deep and would have a 4-point mooring system and spuds for positioning. Standard deck equipment would include air compressors, welding machines, and generators. The leads and spotter arrangement would allow piles to be driven without use of a template. After driving, piles would be temporarily braced with steel channel until concrete work begins.

Each LNG ship berth would include mooring systems (breasting and mooring dolphins) designed for both port and starboard mooring of vessels, LNG unloading platforms, and appurtenant facilities. The LNG unloading platforms would be supported on steel pilings and would be constructed of concrete and reinforcing steel. Each finished platform would support the following equipment:

- four LNG unloading arms and one vapor return arm;
- nitrogen for purging the unloading arms;

Non-Internet Public

FINAL ENVIRONMENTAL IMPACT STATEMENT FOR THE
GOLDEN PASS LNG TERMINAL AND PIPELINE PROJECT
Docket Nos. CP04-386-000 and
CP04-400-000

Figure 2.5.1-1
Proposed Routes to the Dredge Material Placement Areas

- gangway tower;
- LNG and potable water piping;
- fire suppression pumps and piping;
- elevated firewater monitors;
- elevated access roadway;
- berth operator's shelter; and
- communications, electric power, and instrument cabling.

Barge Unloading Facilities

Installation of ship unloading facilities would begin following dredging of the slip using conventional heavy lift derrick barges. Piles, girders, and other major construction materials would be delivered to the site on cargo barges. Light loads of supplies to support the marine construction would be delivered land-side by trucks. A 1,000-ton deck barge (approximately 40 feet by 140 feet by 10 feet) would be located alongside each of two crane barges for material receipt and temporary working storage. Supply barges would arrive as required for the construction schedule and would be tended by appropriate tugs and crews. One tugboat and two workboats would be on site full time for barge and crew movements. All barges and construction activities would take place within the marine terminal slip and would not affect marine traffic in the Port Arthur Channel.

The crane barges would be used to lift beams and other materials into place. A heavy lift crawler crane on a barge would be used for lifting piles into place for driving. Concrete would be delivered by batch trucks from local facilities to the site and placed by the appropriate crane barge.

2.5.1.3 LNG Storage and Vaporization Facilities

Storage Tank Construction

The most labor-intensive and time-consuming construction activity would be the construction of the five LNG storage tanks. Three tanks would be constructed during Phase 1 and the remaining two during Phase 2. Each tank would take over 2 years to complete, with construction of each tank beginning on a staggered basis and proceeding concurrently over the approximate 5-year construction period. Golden Pass has selected four tank contractors to provide a tank design and documentation for the LNG storage tanks. The design, details and construction of the LNG tank would be similar for all four of the tank contractors. Although the timing and sequence of the construction may vary somewhat between the contractors, the procedure would generally be as follows:

- Pile Foundation: After the soil has been treated by soil replacement, piles would be driven by suitable impact hammer to the required depth. The upper soil layer would be excavated and gravel installed.

- Corner Ring and Bottom Slab: To ensure effective development of pre-stress in the corner structure of the wall and bottom slab joint (the bottom slab and wall form a reversed T-shape), the corner ring would be constructed prior to the wall and center portion of the bottom slab. Rebar, pre-stress ducts and anchorages would be installed into fixed formwork to provide the accurate structural configuration of the corner ring. The rebar arrangement for the bottom slab and the installation of heating pipes would be carried out at the same time as the corner ring construction.

As soon as the pre-stress work of the corner ring is complete, the casting of the bottom slab concrete would follow.

- Wall Construction by Sliding Form: As soon as corner ring structure has cured, preparation of the wall form would begin. The installation of the rebar and the pre-stress tendon duct would precede the assembly of the forms and scaffolding. Temporary construction openings (to permit future access into the outer container and construction of the inner container, etc.) would be constructed during the initial concrete lifts. Rebar and embeds would then be installed. Nine percent nickel and carbon steel insert strips would be cast into the concrete wall for the attachment of the wall liner plates and for thermal corner protection along with external support embedments for piping, stairways and other connections and structures. The concrete for the prestressed concrete wall would be poured and the bottom carbon steel vapor liner would be installed.

- Steel Roof Construction and Air-Raising: During the construction of the outer concrete container wall, construction of the steel dome roof and suspended deck would be undertaken on temporary supports inside the outer container. At the top of the outer concrete container wall, the steel dome roof compression ring would be cast into the concrete. On completion of the upper concrete ring beam, the steel dome roof would be air raised into position and secured to the embedded compression ring. The suspended deck and dome roof would be raised into final position during the air raising operation by a number of blowers. Construction openings would be temporarily closed during the roof air raise operation.

- Closing of Temporary Entrance: For the convenience of inner tank construction, the concrete outer wall would include a large temporary entrance. Before pre-stressing, the entrance would be closed by self-compacted expansive concrete. Pre-stressing of the pre-stressed tendons to the design forces would be done in the sequence of the vertical wall tendons followed by the horizontal wall tendons. The ducts would be grouted as soon as pre-stressed to avoid corrosion.

- Concrete Roof and Connections: After securing the dome roof to the compression ring, installation of roof nozzles, penetrations and studs plus steel reinforcement and concrete covering of the steel dome roof would be undertaken. The roof slab would be constructed in two or three layers. Each layer would consist of circumferential rings varying in width and poured to progress simultaneously on opposite sides of the dome. The temporary construction opening(s) would again be closed and the tank pressurized to provide internal vapor pressure support of the roof during placement of the first concrete layer. The internal pressure would be maintained until the first layer concrete pours are completed and the concrete has cured sufficiently to be self-supporting.

- Installation of Inner Tank and Tank Nozzles and Accessories: The installation of the inner tank would take place as soon as the roof is completed. Construction of the concrete plinths in readiness to receive the roof platform steelwork also would be undertaken. Internal work would include the installation of vapor barriers to the inside face of the concrete container, and placement of concrete leveling screeds, base insulation, and sand layers. Insulation would be extended up the inside face of the outer concrete container vapor barrier to a height of approximately 15 feet to provide thermal protection of the bottom corner of the concrete wall and base slab. Installation of the 9 percent nickel steel "secondary bottom" and bottom corner protection would be completed, and a concrete upper leveling course screed would be placed on top of the 9 percent nickel steel secondary bottom. Installation of the 9 percent nickel steel inner container annular and bottom plates would be undertaken on completion of the upper leveling

course screed. After installation of the inner container annular plates, work would commence on erection of the inner tank shell with provision for a temporary opening into the inner container at the same location as the outer tank opening.

The tank internal accessories, such as pump columns, bottom and top fill, instrument wells, and purge and cool-down piping, would be installed, as well as roof platforms, walkways, and piping. The construction opening door sheet in the inner container would be installed and closed. External attachments, such as structural platforms and pipe support installations, would be completed.

- Hydraulic Test of the Inner Tank: After completion of the tank internal piping, the temporary opening in the outer tank wall would again be closed. The inner tank would then be hydrostatically tested. Golden Pass anticipates that it would purchase most of the hydrotest water from the Lower Neches Valley Authority (LNVA) and transport it to the LNG terminal in barges. Some nominal amount of hydrotest water may be obtained from the Port Arthur DWU. Each tank would require about 28 million gallons of hydrotest water. To minimize water usage, the tanks for each phase of construction would be hydrotested with the same water by transferring water from the one tank to the next tank at the conclusion of hydrotesting of the first tank. Approximately 250,000 gallons of additional water may be needed for each successive tank. The total duration of hydrotest of each tank from start of filling to emptying is expected be approximately 3 weeks. Golden Pass does not plan to add chemicals to the test water. Upon completion of the hyrotest of the final tank, water would be discharged to the marine terminal basin at a rate of about 1,800,000 gallons per day or less. The test water would be sampled before discharge to ensure it is within accepted discharge parameters. All testing would be carried out in accordance with all applicable federal and state requirements.

- Installation of Process Piping, Insulation and In-Tank Pumps: Process piping from tank top to grade would be installed. Following a successful inner container hydrotest, the tank would be washed down and cleaned. The resilient blanket would be installed on the outside of the inner tank shell, followed by final installation of the instrumentation inside the tank and annular space. The temporary construction opening would be closed permanently and installation of insulation systems would begin.

- After completion of insulation system installations, the tank would be visually inspected and cleaned. LNG pumps would then be installed; the tank would be closed and purged with nitrogen to a positive gauge pressure.

In addition to hydraulic testing, each LNG tank would be pneumatically tested at a pressure of 1.25 times the design pressure for 1 hour in accordance with API 620.

Other Facility Construction

Construction of the foundations and pipe racks, installation of major mechanical equipment, terminal buildings, process and utility piping, and electrical and instrumentation would occur once tank construction is underway. These facilities would be completed and pre-commissioned in readiness for completion of the LNG storage tanks. Installation of these facilities generally would be completed in the following sequence after site preparation activities are finished:

- Install underground piping;
- Install foundations, including piling, for the buildings, major equipment, and pipe racks;

- Install major equipment on the foundations;
- As pipe racks are completed, install process and utility piping and cable trays;
- Once major equipment is in position, install piping, electrical and instrumentation tie-ins;
- Install insulation as soon as piping systems are completed; and
- Complete instrumentation and electrical loop testing and pre-commissioning concurrently with the completion of the tanks.

Piping systems would be tested in accordance with established codes, either hydrostatically or pneumatically, as applicable. In general, cryogenic piping would be tested with dry air or nitrogen at 1.1 times the design pressure. Non-cryogenic piping would be tested with water at 1.5 times the design pressure. In general, testing of the plant piping systems would be conducted as follows:

- LNG systems would be pneumatically tested up to the high-pressure LNG pumps;
- The remaining LNG systems and all other systems would be hydrotested using water (approximately 800,000 gallons) from the firewater tank and firewater distribution system (the 448,000-gallon firewater tank would be constructed in time to have water available when hydrotesting is scheduled);
- The seawater piping supply and return system would be either hydro-tested or service tested with seawater pumps;
- After the testing is completed, the fresh water would be drained into the stormwater collection system to be tested prior to being released into the SNWW; and
- Piping systems would be tested in accordance with established codes, either hydraulically or pneumatically.

Final Grading and Site Restoration

All areas of the property disturbed by construction of the proposed facilities would be stabilized with temporary erosion controls until construction is completed. After final installation of facility equipment and piping; general clean-up, any final road paving, finish grading and gravel surfacing of the site would be completed. In general the process areas would have concrete paving; the roads and parking lots would have asphalt paving; equipment and work areas, outside the process areas, will have gravel surfacing; and all other areas will be unpaved. All unpaved areas would be stabilized, seeded, and mulched to establish a grass cover.

Flooding

The entire LNG terminal site is within the Federal Emergency Management Agency (FEMA) Zone A12 100-year coastal hurricane floodplain (FEMA, 1992) where the 100-year flood elevation is based on a storm surge under hurricane conditions. Golden Pass estimates that the 100-year storm surge elevation at the LNG site is 10 feet NGVD and that worst case wind-induced wave heights are 4.3 feet. Finish grade of the on-shore LNG terminal facilities would be at an elevation of 8 feet NGVD, still below the 100-year design elevation. However, the perimeter storm surge protection barrier would be constructed with a finished top-of-berm elevation of 16 feet NGVD. As a result, the proposed storm surge protection barrier

is expected to be sufficient to prevent flooding of the site from the 100-year frequency hurricane storm surge plus 4-foot waves with approximately 2 feet of freeboard.

2.5.2 Pipeline System

The proposed pipeline would be designed, constructed, operated, and maintained in accordance with federal safety standards that are intended to ensure adequate protection for the public and to prevent natural gas pipeline accidents or failures. These regulations include DOT regulations in 49 CFR Part 192, Transportation of Natural and Other Gas by Pipeline: Minimum Federal Safety Standards. Among other design standards, 49 CFR Part 192 specifies pipeline material selection; minimum design requirements; protection from internal, external, and atmospheric corrosion; and qualification procedures for welders and operations personnel. In addition, Golden Pass would comply with the siting and maintenance requirements in 18 CFR Part 380.15 and other applicable federal and state regulations.

2.5.2.1 General Pipeline Construction Techniques

Figure 2.5.2-1 shows the typical steps of cross-country pipeline construction. Standard pipeline construction proceeds in the manner of an outdoor assembly line composed of specific activities that make up the linear construction sequence. These sequenced operations include survey and staking of the right-of-way, clearing and grading, trenching, pipe stringing and bending, welding and coating, lowering-in and backfilling, hydrostatic testing, and cleanup.

Where the Loop would be constructed adjacent to (and generally 25 feet from) the Mainline, the Mainline pipeline would be installed first, through completion of backfilling of the pipe trench, by one construction spread. A second construction spread would trail approximately 1 to 2 miles behind the first spread, installing the Loop and restoring the entire right-of-way. This staggered construction approach would eliminate the safety hazard posed by having two ditches open simultaneously, help reduce the right-of-way width by maintaining only one spoil pile at a time, and minimize the amount of time that any one point along the right-of-way remains disturbed.

In addition to the standard pipeline construction methods described below, Golden Pass would use special construction techniques where warranted by site-specific conditions. These special techniques would be used for crossing waterbodies, wetlands, agricultural areas, roads, railroads, foreign pipelines, and residential and commercial/industrial areas (see section 2.5.2.2).

Survey and Staking

Before construction, a civil survey crew would stake the outside limits of the right-of-way, the centerline location of the pipeline(s), drainage centerlines and elevations, highway and railroad crossings, and any temporary extra workspace, such as lay down areas or at stream crossings. Texas and Louisiana One Call systems would be contacted and underground utilities *(i.e.,* cables, conduits, and pipelines) would be located and flagged. Affected landowners would be notified prior to surveying and staking of the construction right-of-way.

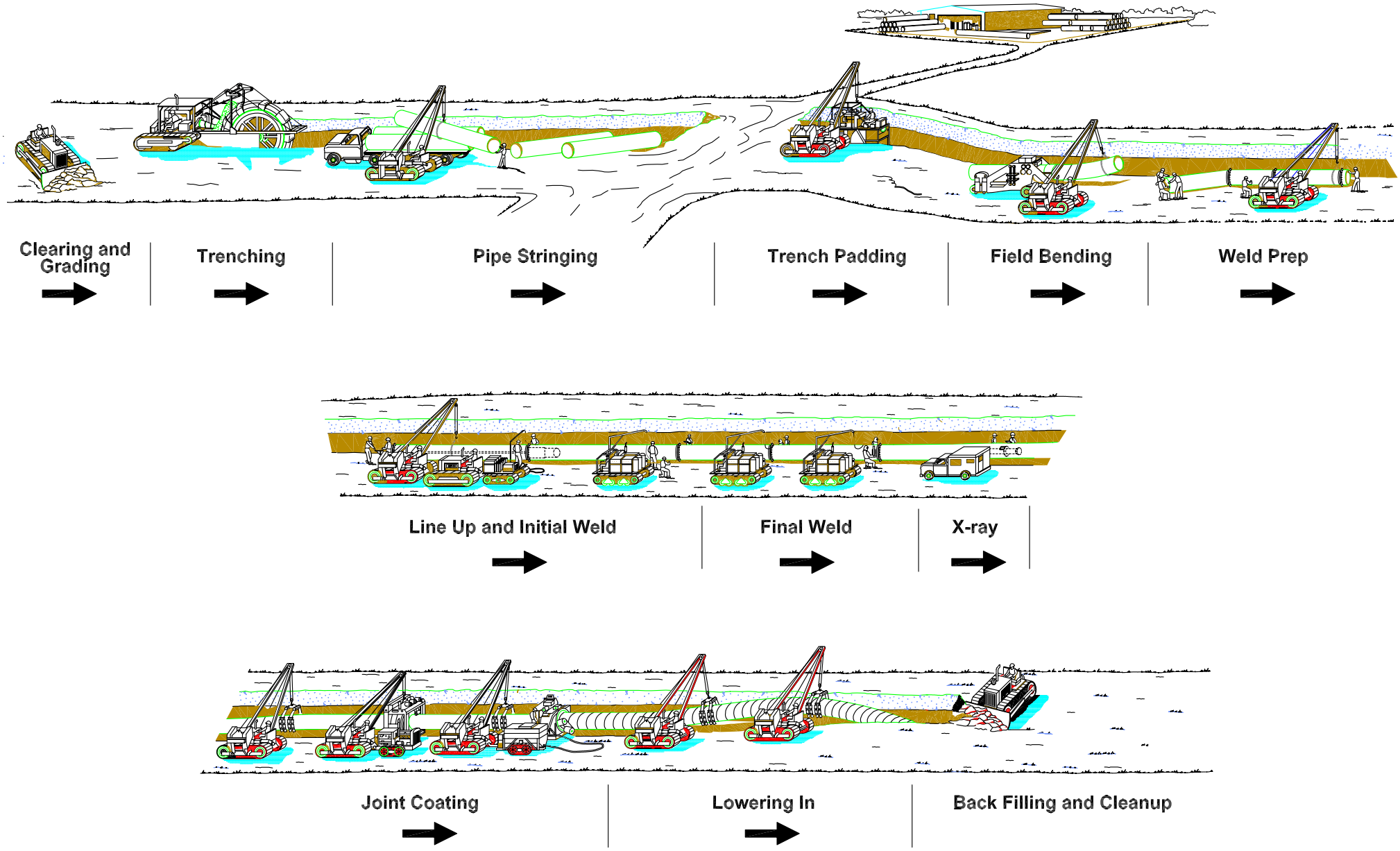

Figure 2.5.2-1
Conventional Pipe Lay - Overland Construction Procedures

Golden Pass LNG Terminal and Pipeline Project

Jefferson, Orange & Newton Counties, TX and Calcasieu Parish, LA

Clearing and Grading

The construction right-of-way and additional temporary work areas would be cleared of shrubs and trees and other obstructions. Timber would only be removed when absolutely necessary for construction purposes. Timber and other vegetation debris may be chipped for use as erosion-control mulch, burned, or otherwise disposed in accordance with applicable state and local regulations, and landowner crossing agreements. Fences would be cut and braced along the right-of-way, and temporary gates would be installed to control livestock and limit public access.

The right-of-way would then be graded where necessary to create a reasonably level working surface to allow safe passage of construction equipment and materials. Grading would not take place in wetlands unless topographic or other features make the right-of-way unsafe for construction equipment. Where applicable, topsoil would be stockpiled separately from excavated subsoil. Temporary erosion controls would be installed immediately after initial disturbance of the soil to minimize erosion, and would be maintained throughout construction.

Trenching

The trench would be excavated with a rotary trenching machine, a track-mounted backhoe, or similar equipment. No blasting is anticipated because of the absence of consolidated bedrock. The trench would be excavated at least 12 inches wider than the diameter of the pipe, or a minimum of 48 inches for the 36-inch-diameter Mainline and Loop, and 36 inches for the 24-inch Beaumont Lateral. The sides of the trench would be sloped (for safety) with the top of the trench up to 20 feet across, depending upon the stability of the native soils. The trench would be excavated to a sufficient depth to allow a minimum of 3 feet of soil cover between the top of the pipe and the final land surface after backfilling. Excavated soils would be stockpiled along the right-of-way on the side of the trench away from the construction traffic and pipe assembly area. Where the new pipeline right-of-way would be co-located adjacent to an existing pipeline right-of-way, the spoil would be placed on the same side of the trench as, but not directly over, the existing pipeline to keep working equipment off the operating pipeline. In areas where topsoil stripping is required, the topsoil and subsoil would be stored in separate windrows on the construction right-of-way and would not be allowed to mix. The landowner would be offered the option of full width, or ditch and spoil-side topsoil segregation.

Stringing and Bending

Steel pipe for the pipeline would be procured in nominal 40-foot lengths, or "joints," protected with an epoxy coating applied at a coating yard and shipped to strategically located storage areas, or pipe yards. The individual joints would be transported to the right-of-way by truck and unloaded by small portable cranes and/or side-boom tractors that would place the joints along the excavated trench. In upland areas, the pipe would be placed along the excavated trench in a single, continuous line, easily accessible to the construction personnel on the "working" side of the trench, opposite the "spoil" side. In wetland areas and at stream crossings, the amount of pipe required to span the wetland/stream would be stockpiled in temporary extra workspaces on one or both sides of the resource. Where bending is required to allow the pipe to follow natural grade and direction changes, a track-mounted hydraulic bending machine would bend the individual joints of pipe to the desired angle. In certain areas, prefabricated fittings would be used where field bending is not practicable.

Welding and Coating

After stringing and bending are complete, the pipe joints would be aligned, welded together, and placed on temporary supports along the edge of the trench. All welds would be inspected, both visually and

radiographically, for integrity and any welds that do not meet the design strength requirement would be repaired or cut out and re-welded. Following welding, the previously uncoated ends of the pipe at the joints would be epoxy coated. The coating on the completed pipe section would then be inspected and any damaged areas would be repaired.

Lowering-in and Backfilling

After welding and coating are completed, the pipe section would be lifted off the temporary supports and lowered into the trench by side-boom tractors. Foreign pipelines would be crossed by installing the proposed pipeline under the foreign pipeline (see figure 1-1 in appendix D). Concrete-coated pipe would be used if required for negative buoyancy in saturated soils. Bladed equipment or backhoes would be used to push the excavated material back into the trench. No construction debris, including wooden supports, welding rods, containers, brush, trees, or refuse of any kind, would be permitted in the backfill. Segregated topsoil, would be placed after backfilling the trench with subsoil. Following backfilling, a small crown of material would be left over the pipeline to allow for any future soil settling that might occur. In upland areas, excess soil would be distributed evenly on the right-of-way, while maintaining existing contours.

Hydrostatic Testing

After backfilling, the pipeline would be hydrostatically tested in accordance with DOT regulations to ensure that the pipeline can operate safely at the design pressure. Test segments of the pipeline would be capped and filled with water. The water in the pipe would be pressurized and held for a minimum of 8 hours. If a leak or break in the line were to occur during testing, that section of pipeline would be repaired and retested until DOT specifications are met.

Upon completion of the test, the water may be pumped to the next pipe segment for testing or discharged. After testing is completed, the test water would be discharged through an energy-dissipating device and returned to the original source or as otherwise directed in compliance with the National Pollutant Discharge Elimination System (NPDES) Permit conditions. Once a segment of pipe has been successfully tested and dried, the test cap and manifold would be removed, and the pipe would be connected to the remainder of the pipeline. No chemicals would be added to the test water and no desiccant or chemical additives would be used to dry the pipe.

Cleanup/Restoration

Post-construction restoration activities would be done in accordance with our Plan and Procedures. After the segment of pipe has been installed, backfilled, and successfully tested, the right-of-way, temporary extra workspaces, and other disturbed areas would be finish-graded to original contours, and the construction debris would be disposed of properly. Permanent soil stabilization efforts would include revegetation of all previously-vegetated areas that were disturbed by construction. In agricultural areas, compacted subsoil would be disked, and the segregated topsoil would be returned to its original horizon. Temporary and permanent erosion and sediment control measures, including silt fencing, diversion terraces, and vegetation, would be installed at that time. Private and public property, such as fences, gates, driveways, and roads, would be restored to original or better condition.

Active cropland may be left unseeded at the request of the landowner if preparation of the ground for planting is imminent following construction. Pasture would be reseeded with a similar species or mixture. Residential and commercial lawns would be reseeded or sodded, depending upon the original grass variety. Shrubs and small trees on residential properties would be temporarily transplanted and replaced, where practicable and where allowed relative to the permanent right-of-way. Forested areas

would be allowed to recover naturally, except that no trees would be allowed to grow within the pipeline operational right-of-way in upland areas to facilitate pipeline inspections.

Post-Construction Monitoring

The revegetation success would be monitored by Golden Pass, and reseeding, fertilizing, and other measures would be employed until a cover equivalent to approximately 80 percent of similar, adjacent areas is achieved. Temporary and interim erosion control measures would be removed at that time.

2.5.2.2 Special Construction Techniques

Areas where specialized construction techniques would be used include the crossings of agricultural areas, waterbodies, wetlands, roads/railroads, and residential or commercial/industrial areas. Golden Pass proposes to use specialized construction techniques to cross one or a combination of several of these areas as described below. The pipeline system would cross a total of 88 perennial waterbodies and one intermittent drainage, of which 53 are described as ditches. The proposed crossing method for each waterbody is included in table F-3 in appendix F. About 26.5 miles (34 percent) of the pipeline route is classified as wetland. All water and wetland crossings would be constructed in accordance with the Golden Pass SWPPP and our Procedures.

Agricultural Areas

Topsoil would be conserved in actively cultivated and rotated cropland, improved pastureland, and non-saturated wetlands (see figures 1-2 through 1-8 in appendix D). Topsoil would be conserved in rangelands if requested by the landowner. A maximum of 12 inches of topsoil would be segregated in these areas, and in other areas at the specific request of the landowner or land management agency. The topsoil and subsoil would be temporarily stockpiled in separate windrows within the construction right-of-way and would not be allowed to mix with subsoil. Where topsoil is less than 12 inches deep, the actual depth of the topsoil would be removed and segregated.

Golden Pass would consult with landowners before construction through rice fields and crawfish ponds to time construction to cause the least interference with flooding of these areas. Golden Pass would also request landowners not to flood the fields through which construction is planned. This would allow sufficient time for the fields to dry and use of conventional construction methods. Any irrigation ditches that are dry at the time of construction would be open cut, then repaired to the satisfaction of the landowner. Any irrigation ditches that have water flowing at the time of construction would be flumed to maintain water flow. After construction activities are completed, all levees, ditches, contours, and grade would be repaired and/or restored to original condition.

Conventional Open-Cut Waterbody Crossing Technique

The open cut crossing method is proposed for most minor waterbody crossings where dry (unsaturated) soil conditions are anticipated on the banks (see figure 2-1 in appendix D). As proposed, these crossings would involve excavation of the pipeline trench across the waterbody, installation of the pipeline, and backfilling of the trench with no effort to isolate flow from construction activities. Excavation and backfilling of the trench would be accomplished using backhoes or other excavation equipment working from the banks of the waterbody. Where there are potentially saturated wetlands along the banks, the excavator and other heavy equipment would operate off of timber mats to provide stability and prevent damage to the adjacent wetland surface. Trench spoil would be stored at least 10 feet from the banks (topographic conditions permitting). A section of pipe long enough to span the entire crossing would be fabricated on one bank and either pulled across the bottom to the opposite bank, floated across the stream,

or carried into place and submerged into the trench. The trench would then be backfilled and the bottom of the watercourse and banks restored and stabilized. Sediment barriers, such as silt fencing, staked straw bales and trench plugs, would be installed to prevent spoil and sediment-laden water from entering the waterbody.

Dry Waterbody Crossing Technique

The dry flume crossing method would be used for some minor and intermediate waterbodies and would involve installation of a temporary dam and a flume pipe to divert the entire stream flow over the construction area and allow for trenching of the crossing in dry or nearly dry conditions (see figures 2-2 through 2-5 in appendix D). A 10-foot vegetated buffer zone would be left between the edge of the waterbody (or any associated wetlands) and the upland construction area. Dams would be constructed of sand bags, sand bags and plastic sheeting, or inflatable bladders to direct the flow into the flume pipe. Spoil removed during the trenching would be stored at least 10 feet away from the water's edge (topographic conditions permitting). A section of pipe long enough to span the entire crossing would be fabricated on one bank and slipped under the flume pipe to the opposite bank. The trench would be backfilled and the bottom of the watercourse and banks restored and stabilized before the flume pipe and dams are removed. Sediment barriers, such as silt fencing, staked straw bales and trench plugs, would be installed to prevent spoil and sediment-laden water from entering the waterbody.

The dry dam and pump crossing method would involve damming the stream with sandbags or equivalent materials, on both sides of the construction work area, and pumping the stream flow around the construction zone (see figures 2-6 and 2-7 in appendix D). Excavation of the trench, installation of the pipeline, and restoration would be similar to that described above for the flumed crossing.

HDD Crossing Technique

Golden Pass proposes to use an HDD to cross most major waterbodies, some other waterbodies (in conjunction with highway crossings), one congested residential area, some wetland areas, and open water segments of the Keith and Shell Lake crossings. An HDD is a trenchless installation process by which pipeline is installed beneath obstacles or sensitive areas utilizing equipment and techniques derived from the oil well drilling industry (see figures 2-8 through 2-12 in appendix D). The primary advantage to HDD is that there is minimal disturbance of the ground surface between the entry and exit points of the HDD, provided there is reasonable access to the entry and exit points for the drilling rig, reaming pipe, and fluids handling equipment. The length of pipeline that can be installed by HDD depends upon subsurface conditions (geology) and pipe diameter, and is limited by available technology and equipment sizes. The proposed HDDs would include land-to-land, land-to-water, and water-to-water.

An HDD involves a multi-stage process that consists of establishing a small diameter pilot hole along a crossing profile, followed by enlargement of the pilot hole (reaming) to accommodate pull back of the proposed pipeline. The pilot hole is drilled using rotation cutting and/or jetting with a jetting assembly attached to drill pipe. The cutting action of the drill head is remotely operated to control its orientation and direction. The position of the drill string is electronically monitored and directional corrections made as necessary to ensure that the drill string maintains the desired alignment.

Enlarging the pilot hole is an incremental process accomplished with multiple reaming passes, depending on the pipeline diameter and subsurface geology, to increase the hole diameter. Upon successful completion of the reaming operation, a cylinder shaped swab is pulled through the hole to ensure the integrity of the completed hole and prepare for pullback of the pipe. The pre-assembled, hydrostatically tested section of pipeline is then pulled into the completed hole. A complete description of the HDD process is included in appendix E (*Horizontal Directional Drill Plan – Sabine Island WMA*). Bentonite

drilling fluid is delivered to the cutting head through the drill string to provide the hydraulic cutting action, lubricate the drill bit, help stabilize the hole and remove cutting spoil as the drilling fluid is returned to the entry point. Drilling fluid is again used during the reaming process to remove cutting spoil. To capture drilling fluids in water-to-water HDDs and to minimize the release of drilling fluids to the surface water body, a casing would be placed between the entry pit and the drill barge. Solids from any drilling fluids released to a surface water body would either settle out in the containment pits, or be rapidly dissipated by natural currents.

Spud Barge Open-Cut Crossing Technique

Golden Pass proposes to install the Mainline and Loop in the inland open water crossings of Keith, Johnson, and Shell Lakes using shallow draft spud barges (see figures 2-13 through 2-17 in appendix D). The use of spud barges in these lakes would require the excavation of a flotation channel within a 375-foot-wide construction right-of-way. An off-right-of-way channel would also need to be dredged from the Intracoastal Waterway to provide equipment access into the lakes. Use of barges with anchor spuds would eliminate the need for an anchor spread and anchor-handling boats, thus minimizing the area affected by construction operations.

Golden Pass would conduct a shallow hazards survey immediately prior to beginning construction to identify existing foreign pipelines, obstructions that may adversely affect pipeline installation, and potentially significant submerged cultural resources. Where water depths permit, the pre-construction survey would be accomplished using small, shallow draft boats equipped with remote-sensing instrumentation. Adjustments to the proposed pipeline centerline would be made, where feasible, to avoid magnetic anomalies that might indicate obstructions or significant cultural resources. Where avoidance is not feasible, anomalies would be further investigated by probing, sampling, or diving, and removed or recovered, as appropriate and as approved by local agencies. The right-of-way centerline and boundaries would then be staked with bamboo poles or floating buoys for excavation.

The trenches for the Golden Pass Mainline and Loop would be excavated using a barge-mounted clam-bucket (or equal) dredge. Additional dredging would be required to allow the barges access to the lakes from the Intracoastal Waterway and along the right-of-way where water depths are less than 8 feet to accommodate the barge's 7-foot draft. The dredge barge would cast pipe-trench and flotation-channel spoil to either side of the centerline, keeping the spoil below the water surface where feasible, to minimize wave-generated turbidity. Trenches for both the Mainline and Loop would be excavated at the same time. In waters that support powered marine vessel traffic, the spoil would be placed parallel to the trench in 500-foot-long piles, with 50-foot-wide openings to allow the passage of local watercraft. To ensure the safety of the boating public, the spoil piles and openings would be marked with timber piles, warning signs, and navigation lights. The proposed pipelines would be installed under foreign pipelines with approximately 18 inches of separation (see figure 2-15 in appendix D).

The pipeline would be fabricated aboard a string of shallow-draft spud barges, lashed together in a line to form the lay barge. Once each weld has passed inspection and received its final coating, the pipe would be lowered off the back end of the lay barge into the pipe trench by lifting the anchor spuds of the lay barge and moving the lay barge forward the length of one pipe joint. The next pipe joint would be rolled into position for welding and the process would be repeated. Following lowering in, surveyors would confirm that the pipe is at sufficient depth to provide the minimum soil cover required for safe operation of the pipeline. If the minimum cover is not achieved, the pipe would be lowered farther using a barge-mounted hydraulic jetting system.

Once sufficient depth of the pipe is confirmed, the dredge barge would return to backfill the pipe trench and flotation channel, using the available spoil adjacent to the excavation. The bottom would be restored

to within 1 foot of the original contour using the clam bucket and confirmed by survey. Where the 1 foot grade tolerance is not achieved, a joint of pipe would be mounted on the dredge line and dragged across the bottom to remove high spots, until the contours have been restored to within the allowable tolerance. Where there is insufficient spoil to completely backfill the trench and channel to within 1 foot of the original contours, which may be due to erosion of the spoil piles or suspension of solids in the water column during handling, the trench and channel would be allowed to naturally fill with sediments over time.

Wetland Crossing Techniques

Unsaturated wetlands (wetlands without standing water or saturated soils) would be crossed using construction techniques similar to the upland construction technique (see figures 3-1 through 3-8 in appendix D). However, if the wetland crossing is less than 100 feet in length, Golden Pass states that spoil can be effectively moved to the adjacent upland spoil areas within the right-of-way, allowing the temporary right-of-way width within the wetland to be reduced to 85 feet for the Mainline, and 110 feet where the Mainline and Loop are adjacent. A temporary board road would be installed to allow passage of equipment with minimal disturbance of the surface and existing vegetation. Trees would be cut to grade, but stumps would only be removed within 15 feet of the edge of the pipe trench, or where safety concerns dictate otherwise. Topsoil over the pipe trench would be segregated from subsoils. A 10-foot vegetated buffer zone would be left between the wetland and the upland construction areas, except for the pipe trench itself, and erosion control measures such as silt fences, interceptor dikes, and hay bale structures would be installed and maintained to minimize sedimentation within the wetland. Trench plugs would be installed where necessary to prevent the unintentional draining of water from the wetland. Wetlands with standing water, but not constantly or regularly completely submerged would be crossed as described above for unsaturated wetlands, except that topsoil would not be segregated.

Push/Pull Crossing Technique Using a Marsh Buggy

Where portions of the Mainline and Loop would cross coastal and estuarine marsh that is tidally influenced and perennially flooded or submerged, the water is generally too deep to construct board roads, yet too shallow to float construction barges. In these flooded marsh areas, Golden Pass proposes to use a "push/pull" construction method where there are no foreign pipeline crossing or excessive lengths between accessible fabrication/staging areas (see figures 3-9 through 3-11 in appendix D). This method would also be used to cross one major waterbody crossing (Magnolia Cut) and along a double-levied ditch.

A crane mounted on specially designed pontoons equipped with tracks, referred to as a "marsh buggy," would be used to excavate and backfill the pipe trench and no separate equipment space or passing lane would be required. However, because of the saturated condition of the soils, the slopes of both the pipe trench and the spoil pile would be very shallow, requiring a proportionately wider construction space for the trench and spoil pile for installation of one pipeline (estimated to be 90 feet) or two pipelines (estimated to be 115 feet).

Temporary staging areas would be established at locations along the right-of-way that are accessible for construction equipment, personnel, and the delivery of materials from existing roads or waterways. Some staging areas may be set up on spud barges temporarily anchored in navigable waterways. Push/pull sections would be fabricated within these staging areas and the pipe would be pushed into the pipe trench. The pipe trench would remain flooded with water at all times, allowing flotation of the pipe. Floats would be strapped onto the pipe to keep it afloat to minimize drag on the bottom of the trench. A cable would be strung from the leading end of the push/pull section to the next staging area and placed in tension to guide the pipe along the trench. Because of the large bending radius of the 36-inch-diameter

concrete coated pipe, the trenches between staging areas must be nearly straight. The distances between staging areas would be limited by the weight of the pipe section and the push/pull capacity of the construction equipment. Once the section of pipe has been floated into place, the floats would be cut and the pipe would be allowed to sink to the bottom of the trench. The marsh buggy would then backfill the trench, and the disturbed area would be restored.

Where the Mainline and Loop are parallel, the marsh buggy would first excavate the Mainline trench. The pre-fabricated pipe would be pulled into place and the marsh buggy would backfill the trench. A second marsh buggy would then follow the first, excavating the trench for the Loop. Since the backfill over the Mainline would be too soft to support a marsh buggy, spoil from the Loop trench would be cast to the side of the Loop away from the Mainline. After floating the pre-fabricated section of Loop into place, the marsh buggy would backfill the trench by tracking along the remains of the second spoil pile.

Wetland Restoration Techniques

Original surface hydrology would be re-established in wetlands and marsh by backfilling the pipe trench (and flotation channel, where applicable) and grading the surface with backhoes or draglines operating from the board road or a barge, or low-ground-pressure tracked vehicles working from the spoil pile, depending upon the ambient water level, degree of soil saturation, and the bearing capacity of the soils. Segregated topsoil would be replaced in unsaturated wetlands. Roots and stumps would have been removed only in the areas of the pipe trench and flotation channel, allowing existing vegetation to recover more rapidly in the remainder of the right-of-way once the board roads and spoil piles have been removed.

Marsh and wetlands along the proposed pipelines range from saline to fresh, with varying degrees of saturation and water elevation, requiring a variety of plant species to be re-established. In unsaturated wetlands, most vegetation would be replaced by seeding. Saturated wetlands and marsh would typically be re-vegetated by the transplantation of mature herbaceous specimens at pre-established spacing. For example, saline marsh along the Gulf Coast has been successfully restored by planting *Spartina alternaflora* specimens at 3-foot spacing in 0 to 1 foot of water. Up to 80 percent coverage can be expected in 2 to 3 years. Transplant specimens would be obtained from adjacent marsh, collected over a relatively large area to minimize negative impacts to the donor site, or they would be supplied by local commercial nurseries. Adjacent donor sites are preferred over nurseries because the plants would be acclimated to the specific conditions of the site. Some specimens may also be collected from the right-of-way prior to construction, stored in temporary nurseries, and replanted after pipeline construction is complete.

Golden Pass would work with the COE, FWS, NOAA Fisheries, TXPWD, LADWF, and other state and local agencies, and landowners to develop an acceptable site-specific revegetation plan prior to commencement of construction. The permanent right-of-way in forested wetlands would be maintained in accordance with our Procedures (see figure 3-12 in appendix D). Our Procedures require that the permanent right-of-way in forested wetlands be allowed to return to forest except for a 10-foot-wide herbaceous corridor centered over the pipeline and a 30-foot-wide corridor centered over the pipeline where trees greater than 15 feet may be selectively cut and removed.

Bored Crossings

Some waterbodies, and all major highways and railroads would be bored. Boring involves pushing the pipe through a hole below the waterbody, road, or railroad (see figure 4-1 in appendix D). A bore pit is dug on one side of the crossing and a receiving pit is dug on the other side of the crossing, and both are excavated to a depth equal to the depth of the ditch (at least 5 feet below the road surface and 10 feet

below the toe of a railroad embankment). The bore pit is then graded so that the bore is at the proper elevation for installation of the pipe. A boring machine is then lowered to the bottom of the bore pit and placed on supports. The machine cuts a shaft under the crossing using a cutting head mounted on an auger. The pipeline is then pushed through behind the auger.

Roads and Railroads

The pipelines would cross 70 federal, state, or local roads and 12 railroads. Installation of the pipeline under major paved highways and railroads, along which traffic cannot be interrupted, would be accomplished by boring or HDD. Most unpaved roads and drives would be crossed by open cut, and then restored to pre-construction conditions or better (see figure 4-2 in appendix D). If an open-cut for a road crossing would require extensive time, provisions would be made for temporary detours or other measures to allow safe traffic flow during construction. Casings would be installed only where specifically required by railroad/road authorities. All road and railroad crossings would be installed in compliance with applicable permits and approvals.

Residential Areas

Where residences are within 50 feet of the construction work area, Golden Pass would implement the following residential construction techniques. This would include notifying the landowner prior to construction and arranging work hours to take landowners needs into consideration. Dust minimization techniques would be used on site and all litter and debris would be removed daily from the construction work area. During construction, the edge of the construction work area would be safety fenced for a distance of 100 feet on either side of the residence to ensure that construction equipment and materials, including spoil piles, remain within the construction work area. Mature trees and landscaping would be preserved to the extent possible while ensuring the safe operation of construction equipment.

Where residences are less than 25 feet from the construction work area, the pipe section would be welded, inspected, and welds coated prior to any trench excavation. The trench would not be excavated until the pipe is ready for installation, and the trench would be backfilled immediately after pipe installation. Every effort would be made to trench, lower pipeline, make tie-ins, and backfill the trench in one day. Immediately after backfilling the trench, all lawn areas and landscaping within the construction work area would be restored. Site-specific construction drawings depicting the temporary and permanent rights-of-way and noting special construction techniques would be prepared.

Commercial/Industrial Areas

Impacts to commercial and industrial areas would be limited to the construction and post-construction restoration periods when construction activities can inconvenience business owners, employees, and customers. Golden Pass would maintain close coordination with business owners to maintain access, decrease construction duration, and generally minimize impacts.

Foreign Pipeline Crossings

The proposed Project is located in an active oil and gas producing area that is also the landfall for many pipelines from offshore leases in the Gulf of Mexico. As a result, the Golden Pass pipeline system would cross numerous foreign pipelines and flow lines. The Golden Pass pipelines would be installed under most existing foreign pipelines at an appropriate depth to meet soil cover and separation requirements (see figure 1-1 in appendix D). The crossing of foreign pipelines in open water would require a specialty crew and equipment to pass the pipeline string under the existing pipeline, make the tie-in, and place concrete mats between the existing and proposed pipelines to ensure the minimum separation distance is

maintained (see figure 2-15 in appendix D). Extra workspace would be required at foreign pipeline crossings to accommodate the increased excavation depths and avoid placing the spoil or construction equipment over the existing pipelines for safety reasons.

2.5.2.3 Aboveground Facilities

Construction of the meter station and interconnection facilities would involve typical industrial facility construction procedures. Construction activities and storage of construction materials and equipment would be confined to the facility footprint. Following the initial earth work, excavation would be completed as needed for the concrete foundations for the metering equipment and any buildings. Subsurface friction piles may be required to support foundations, depending upon the bearing capacity of the existing soils and the equipment loads. Forms would be set, rebar installed, and the concrete poured and cured in accordance with applicable industry standards. Backfill would be compacted in place, and excess soil would be used elsewhere or distributed around the site to improve grade.

The metering equipment and other materials would be delivered to the site by truck, off-loaded using cranes or front-end loaders (or both), positioned on the foundations, leveled, grouted where necessary, and secured with anchor bolts. All components in high-pressure natural gas service would be hydrostatically tested, and all controls and safety equipment and systems, including emergency shutdown, relief valves, and gas and fire detection equipment would be checked and tested before being placed in service. Following completion of construction, each site would be fenced and most areas in and around the meters and associated piping and equipment would be covered with crushed rock (or equivalent). Roads and parking areas may be crushed rock, concrete, or asphalt. Other ground surfaces, including adjacent areas outside the fence, would be restored, seeded, and revegetated.

Pig launchers and receivers would be installed completely within the boundaries of the associated meter station/interconnect sites. Mainline block valves would be installed within the pipeline right-of-way.

2.6 OPERATION AND MAINTENANCE PROCEDURES

2.6.1 LNG Terminal Facilities

2.6.1.1 Operations

Golden Pass would operate and maintain the facilities in compliance with 49 CFR 193.2503 and 193.2605 and Sections 11.3.1 and 11.5.2 of NFPA 59A, 33 CFR 127, and other applicable federal and state regulations. Prior to construction, Golden Pass would prepare and submit for approval operation and maintenance manuals that address specific procedures for the safe operation and maintenance of the LNG storage and processing facilities. Golden Pass would also prepare an operation manual that addresses specific procedures for the safe operation of the ship unloading facilities in accordance with 33 CFR 127.305. Operating procedures would address normal operations, as well as safe startup, shutdown, and emergency conditions. Golden Pass has agreed to submit, at least 60 days before transferring LNG, for approval two copies of an Operations Manual and an Emergency Manual to the Captain of the Port in accordance with 33 CFR 127.019.

Imported LNG could be obtained from locations throughout the world and delivered via LNG ships to the LNG terminal. However, Golden Pass has signed an agreement with Qatar to supply LNG for an expected period of 25 years, and most LNG for the Project likely would be from Qatar. The Sabine Pilots are presently responsible for scheduling, monitoring weather conditions, establishing working conditions in the SNWW, and declaring channel closure days based on inclement weather. The Sabine Pilots run three pilot boats and meet vessels, day or night, at sea buoy 29 at the Outer Channel.

Golden Pass would provide three 70-ton bollard pull tractor tugs to service the future LNG ship traffic added by the proposed Project to minimize any potential impact on local harbor tug capacity. During normal operations, each LNG ship would be assisted by three tugs. The first tug would meet the LNG ship at the jetties to the SNWW and would escort the ship from this point to the Golden Pass terminal berth. At the approximate midpoint of the SNWW between the jetties and the Golden Pass terminal berth, the second tug would join the ship and continue with the ship to the Golden Pass terminal berth. Upon the ship's arrival at the terminal berth, the third tug would join the ship, and would remain with the ship and the other two tugs throughout unloading activities.

2.6.1.2 Maintenance

Operations and maintenance personnel at the terminal would be trained to properly and safely perform their assignments. The terminal operators would be trained in LNG safety, cryogenic operations, and proper operation of equipment. Operators would meet the training requirements of the Coast Guard, FERC, DOT and other regulatory entities. Golden Pass would maintain a full-time maintenance staff to perform routine maintenance and minor overhauls. Trained and qualified contract maintenance personnel would handle major overhauls and major maintenance activities. Maintenance activities, including scheduled preventive and predictive maintenance and unscheduled maintenance, would be managed through a computerized maintenance management system (CMMS). Scheduling of maintenance activities through the CMMS would be by means of a maintenance work order. The CMMS would automatically print out the day's maintenance work orders. The work orders would be distributed to appropriate maintenance personnel and remain open until the work is completed. The person performing the maintenance work would close out the work order after completion

Maintenance dredging would be performed on a two-year cycle or as otherwise needed. Maintenance dredging is estimated to be approximately 410,000 yd^3 per year or 820,000 yd^3 per cycle. The dredged material would be delivered to an upland placement facility permitted for dredged material disposal, most likely PA-9. Other approved upland placement areas near the site would be considered if they are available during maintenance dredge cycles.

2.6.2 Pipeline System

Golden Pass would operate and maintain the proposed pipeline and aboveground facilities in compliance with DOT regulations provided at 49 CFR 192, FERC's regulations at 18 CFR 380.15, and maintenance provisions of our Plan and Procedures.

A locally based, full-time staff would be assigned to operate and maintain the pipeline. Maintenance activities would include monitoring, inspection, and repair of the right-of-way, and cleaning of the pipeline. Periodic aerial and ground inspections by pipeline personnel would be performed to identify soil erosion that may expose the pipe; dead vegetation that may indicate a leak in the line; unauthorized encroachment on the right-of-way, such as buildings, areas requiring revegetation or repair of erosion control measures; and other conditions that could present a safety hazard or require preventive maintenance or repairs. The pipeline cathodic protection system would also be monitored and inspected periodically to ensure proper and adequate corrosion protection. The pipeline has been designed to use "smart pig" inspection technology.

Golden Pass would maintain vegetation on the permanent right-of-way in upland areas by mowing, cutting, and trimming. Large brush and trees would be removed periodically from within the operational right-of-way. Trees greater than 15 feet in height, or deep-rooted shrubs that could damage the pipeline's protective coating, obscure periodic surveillance, or interfere with potential repairs, would not be allowed

to grow within 15 feet of the pipeline in wetlands or within 25 feet of the pipeline in uplands. The frequency of vegetation maintenance would depend upon the growth rates, but would not be more frequent than dictated by our Plan and Procedures. Vegetation maintenance would not normally be required in agricultural or grazing areas. Other than preventing wetland tree growth as described above, vegetation maintenance would not normally be required in wetlands.

The pipelines would be clearly marked at line-of-sight intervals and at crossings of roads, railroads, waterbodies, and other key points, in accordance with DOT regulations. The markers would clearly indicate the presence of the pipeline and provide a telephone number and address where a company representative could be reached in the event of an emergency or prior to any excavation in the area of the pipeline by a third party. Golden Pass would participate in the Texas and Louisiana One Call systems to prevent third-party damage to their pipelines.

2.7 SAFETY CONTROLS

2.7.1 LNG Terminal Facilities

The LNG terminal facilities would be sited, designed, constructed, operated, and maintained in compliance with federal safety standards. Federal siting and design requirements for LNG facilities are summarized in table 2.7.1-1.

TABLE 2.7.1-1

Federal Siting and Design Requirements for LNG Facilities

Requirement	Description
Thermal Radiation Protection (49 CFR Part 193.2057 and Section 2.2.3.2 of NFPA 59A)	This requirement is designed to ensure that certain public land uses and structures outside the LNG facility boundaries are protected in the event of an LNG fire.
Flammable Vapor-Gas Dispersion Protection (49 CFR Part 193.2059 and Sections 2.2.3.3 and 2.2.3.4 of NFPA 59A)	This requirement is designed to prevent a flammable vapor cloud associated with an LNG spill from reaching a property line of a property suitable for building.
Wind Forces (49 CFR Part 193.2067)	This requirement specifies that all facilities be designed to withstand wind forces of not less than 150 miles per hour without the loss of structural integrity.
Impounded Liquid (Section 2.2.3.8 of NFPA 59A)	This requirement specifies that liquids in spill impoundment basins cannot be closer than 50 feet from a property line of a property suitable for building or a navigable waterway.
Container Spacing (Section 2.2.4.1 of NFPA 59A)	This requirement specifies that LNG containers with capacities greater than 70,000 gallons must be located a minimum distance of 0.7 times the container diameter from the property line or buildings.
Vaporizer Spacing (Section 2.2.5.2 of NFPA 59A)	This requirement specifies that integral heated vaporizers must be located at least 100 feet from a property line of a property suitable for building and at least 50 feet from other select structures and equipment.
Process Equipment Spacing (Section 2.2.6.1 of NFPA 59A)	This requirement specifies that process equipment containing LNG or flammable gases must be located at least 50 feet from sources of ignition, a property line of a property suitable for building, control rooms, offices, shops, and other occupied structures.
Marine Transfer Spacing (33 CFR Part 127.105)	This requirement specifies that each LNG unloading flange must be located at least 985 feet from any bridge crossing a navigable waterway.

2.7.1.1 Spill Containment

LNG Storage Tanks

The five LNG storage tanks would be of a double containment design consisting of an inner steel tank surrounded by a secondary outer concrete tank. The outer tank would be capable of holding at least 110 percent of the design liquid volume of the inner tank as required by 49 CFR 193 Part 193.2181. The tanks would have over-the-top fill and no penetrations below the liquid level. In addition to the secondary containment afforded by the double-containment tank design, the entire facility would be enclosed within a perimeter dike. The perimeter dike, constructed to a height of 16 feet NVGD (8 feet above the finished grade elevation of the site) would ensure that no LNG would leave the plant property even in the highly unlikely event of a failure of both the primary and secondary storage tank containment systems.

LNG Process Area

Each process area would be constructed with a 6-inch-high perimeter curb and would be graded to direct any spills to a 3-foot-wide insulated concrete trough. The process area troughs would drain to the 40-foot-long by 40-foot-wide by 19.5-foot-deep (working depth) sump located in the process area (the spill containment sump located between the vaporizer units). The spill containment system for the process vaporizer area would be capable of containing the full flow of 5,280 m^3 per hour for the maximum LNG product send out rate for a design spill of 10 minutes.

The LNG transfer lines would be provided with spill collection and containment troughs that would drain to one or more containment sumps. Each sump would be sized to contain a 10-minute spill from one of the unloading lines at the maximum design transfer rate in accordance with the requirements of NFPA 59A. In addition, each process area would be independently curbed and graded so that spills would flow to a containment sump by means for the transfer line collection troughs.

The LNG facility would be designed such that the surface runoff and spills of flammable liquids would drain to designated areas for safe containment and disposal and be prevented from entering the general stormwater runoff drainage system. Rainfall which falls directly on the LNG spill containment troughs and sumps would be removed by means of installed pumps to maintain the required spill containment volume. The spill containment stormwater pumps would be automatically disabled if a low sump temperature, indicative of an LNG spill, were detected. To prevent stormwater contamination, all stationary equipment that could release hydrocarbons would be installed within independent curbed areas and all hydrocarbon-containing tanks would be enclosed within diked areas. Runoff from such areas would drain to an oil/chemical collection sump and then to an aboveground storage tank for containment. If the water were found to be unacceptable for direct discharge, the water would be collected and disposed in an approved manner. Surface runoff from areas not subject to potential LNG spills would drain to stormwater collection sumps and be pumped to the outfall in the SNWW. The stormwater runoff pumping system would be designed to accommodate a 10-year, 1-hour rainfall event.

Marine Dock Area

Each of the two marine berths would be provided with an unloading platform spill containment deck. The decks would be constructed with a 24-inch-high curb and sloped to allow free draining to a 15-foot-wide by 2-foot-deep insulated trough on the trestles. At the end of the trestles, the trough dimensions would change to 10-feet wide by a minimum of 3-feet deep and would follow the entire length of the two 30-inch unloading lines to the LNG storage tanks. The marine unloading line impoundment troughs would drain to a 150-foot-long by 50-foot-wide by 11-foot working depth, insulated concrete containment sump

within the LNG storage tank area. In accordance with 49 CFR 193, the volumetric working capacity of each sump would be adequate to contain a 10 minute full flow spill from the marine unloading lines at the designed maximum ship unloading rate of 14,000 m^3 per hour.

2.7.1.2 Hazard Detection System

The terminal would be provided with a hazard detection system consisting of flame detectors, natural gas detectors, low and high temperature detectors, and smoke detectors. The hazard detection system would provide for: the early detection of released gases, flammable gas, liquids and fires; identification of the specific location of a release or fire; initiation of automatic equipment shutdowns; and automatic initiation of fire control systems. A summary of the locations where these detectors would be installed is included in table 2.7.1-2. A closed circuit television system would also be installed for use by security and operations personnel.

TABLE 2.7.1-2

Locations of Combustible Gas, Flame, Low Temperature Spill, Smoke, and Line of Sight Gas Detectors at the LNG Terminal Facility

Detector Location	Combustible Gas Detectors	Flame Detector	Low Temperature Detector	Smoke Detector	Line of Sight Gas Detector
Marine Terminal					
Berth 1	X	X	X		X
Berth 2	X	X	X		X
LNG Storage and Vaporization Facility					
Process Area	X	X			
LNG Tank Area	X	X	X		
Guard House				X	
Administration Building				X	
Maintenance Shop/Warehouse				X	
Vaporizor Area	X	X			X
BOG Compressor Area	X	X			X
Gas Metering Area	X	X			
Substation				X	
Utility Area		X			

2.7.1.3 Fire Protection System

A variety of fire suppression agents would be employed for fighting fires within the LNG terminal. The type of agent used in a specific situation would depend on the characteristics of a particular event and on the relative effectiveness of the various agents on that particular type of fire relative to either a specific unit of the plant design or operation. The types of fire suppression agents to be employed include:

- a looped, underground firewater distribution piping system serving fire hydrants, fire monitors, hose reels;
- fixed high expansion foam system;
- fixed dry chemical systems;

- portable and wheeled fire extinguishers employing dry chemical and CO_2, the latter intended primarily for energized electrical equipment; and
- fire protection in buildings, generally consisting of smoke detectors, ultraviolet/infrared flame detectors, and portable fire extinguishers.

Firewater System

The LNG terminal would have a firewater supply and distribution system to assist in controlling or extinguishing fires, cooling structures and equipment exposed to thermal radiation, and dispersing flammable vapors. Access to firewater would be provided by hydrants, fire monitors, and hose reels located throughout the facility.

Firewater would be obtained from two independent sources. The primary firewater supply would be fresh water from an onsite storage tank. The freshwater would be obtained from the municipal water system and would be stored in an onsite tank sized to provide 2 hours of firewater supply at the design maximum firewater supply rate of 4,000 gpm. Freshwater would be transferred to the distribution system by an electric-driven pump sized for 4,000 gpm. Pressure in the underground firewater distribution system would be maintained by an electric-driven jockey pump sized for 200 gpm, and a spare pump. The fresh water firewater pump would automatically start upon pressure decrease in the fresh water header system.

The secondary backup firewater supply would be seawater provided by two seawater firewater pumps, each sized for 4,000 gpm. Both pumps would be diesel-driven with one serving as a backup to the other. The in-service seawater fire pump would automatically start if the fresh water firewater pump fails to start or if the water demand exceeds the capacity of the fresh water pump.

Nitrogen System

Nitrogen would be used for continuous purging of pump cable glands and compressor seals, for periodic purging of the in-tank pump columns, for purging the unloading arms before and after unloading procedures, for sweeping the vent headers and venting the stack to prevent air ingress, and for snuffing of LNG storage tank and vaporizer pressure safety valve tailpipes in the event of a fire. Nitrogen also would be supplied to the various terminal utility stations for the purpose of purging piping systems. The nitrogen system would consist of two liquid nitrogen storage and vaporization packages: one in-service package plus a full capacity backup.

High Expansion Foam System

Fixed high expansion foam systems would be provided to control ignited and/or unignited LNG spills. While high expansion foam is not expected to extinguish an LNG fire, the foam system would dramatically reduce radiant and convective interchange by forming an insulating blanket between the base of the flame column and the LNG pool surface. This in turn would reduce the rate of LNG vaporization and the size of the flame column. Initial activation of the foam systems would be via low temperature detectors located within the spill containment sumps. The foam systems would be capable of being manually cycled on and off as necessary to maintain a nominal 5-foot depth of foam on the LNG spill until the LNG is completely vaporized. Spill containment sumps for the LNG storage tank, process, and LNG transfer areas would have high expansion foam available.

Vent Systems

Natural gas may be vented to the atmosphere, should a facility upset occur. The common BOG header would be equipped with a control valve that would relieve excess pressure in the tanks in emergency situations. Vent systems would be swept continuously with nitrogen gas to prevent flammable conditions within the piping. The facility is designed such that no venting would occur during normal operating conditions. However, venting could occur if there was no LNG send-out or if the LNG send-out rate were to fall below the minimum required to absorb all of the BOG in the send-out liquid.

Emergency Shutdown System

The LNG terminal would be provided with an emergency shutdown system to allow for the safe termination of operations in the event of an operational incident. Initiation of the shutdown sequence would be either manually by means of manual hand stations located throughout the facility or automatically based on information originating from the various fail-safe hazard detectors positioned at critical locations in the plant. The system would allow for either the shutdown of individual sections of the plant or the entire plant depending on the particular incident. Sections of the plant that could be shut down individually would include the ship unloading operation or individual pieces of equipment. Alarms would be provided in the control room to notify operating personnel should a potentially hazardous condition be detected by the field instrumentation.

Four levels of shutdown would be configured for the Golden Pass LNG terminal as follows, in order from lowest to highest level of shutdown. A shutdown at a higher level may generate one or more shutdowns at the next lower level.

Unit Shutdown (USD) – A USD is the lowest level of shutdown and is designed to isolate a piece or group of equipment or a process system(s) due to unsafe operating condition, or because of manual activation of shutdown pushbuttons. Automatic shutdown would be completed by the safety instrumented systems. The offloading, storage and pipeline operations would be subdivided into logical process systems that shutdown a segment of the facility while allowing the rest of the facility to continue under partial operating conditions.

Process Shutdown (PSD) – A PSD is designed to shutdown and isolate the entire central process facility processing system, or major sections thereof, while maintaining operation of the utility and safety systems and leaving non-affected process areas in partial operation. All utility systems would remain on-line to ensure safe plant shutdown and to maintain life support systems. A PSD would be activated from manual pushbuttons at critical locations throughout the facility.

Emergency Shutdown (ESD) – The ESD is for initial protection of equipment and spaces in the event of a fire or gas alarm. An ESD initiates the actions of a PSD and automatic depressurization of the affected process system(s). Normal power circuits in the affected area(s) would be shutdown while the essential power remains on-line and emergency generators would be started. The ESD systems for all facilities, including packaged equipment, would be fully integrated to safely shut down all associated systems. An ESD can be activated by automatic gas detection and instrument air pressure sensors and by manual ESD pushbuttons.

Total Plant Shutdown (TPS) – This would be the highest level of shutdown wherein the situation has progressed to the point where the only safe action left is to evacuate the facility. Manual pushbuttons would be located at the central control room and the temporary emergency control station in the administration building. A TPS initiates the actions of a PSD and ESD, if that has not already been initiated, depressurizes all process units and disconnects all power to the facility.

2.7.2 Pipeline System

The pipeline would be constructed, operated, and maintained in accordance with all applicable federal, state, and local laws and regulations, including but not limited to the DOT regulations in 49 CFR Part 192.

2.7.2.1 Cathodic Protection

To protect the pipeline from corrosion, cathodic protection would be provided by an impressed current system, and where necessary, supplemented by sacrificial magnesium anodes. A corrosion protection coating would be applied to all buried facilities, and all aboveground facilities would be primed and painted. Cathodic protection units would be monitored regularly to maintain required pipe-to-soil potential in accordance with the specifications set forth by DOT regulations.

2.7.2.2 Emergency Response Procedures

Pipeline system emergencies can include gas leaks, fire or explosion, and/or damage to the pipeline and aboveground facilities. In accordance with DOT regulations, Golden Pass would develop a plan that would address procedures to be followed in the event of a pipeline emergency. This plan would include training of employees on emergency procedures; establishing liaison with appropriate fire, police, and other community officials; and informing the public on how to identify and report an emergency condition on the pipeline route.

2.8 FUTURE PLANS AND ABANDONMENT

2.8.1 LNG Terminal Facilities

Golden Pass has no specific plans for future expansion or abandonment of the LNG terminal. Should the facilities be expanded or abandoned, a FERC authorization would be required and an appropriate environmental analysis would be conducted. The expansion or abandonment would be subject to applicable federal, state, and local regulations in effect at that time.

The composition of LNG from many of the LNG export plants contains higher British thermal unit (Btu) components (such as ethane and propane) that require additional processing to remove and reduce the heating value of the natural gas before the natural gas is injected into the U.S. pipeline system. Golden Pass has not included Btu control in the LNG terminal design. The need for Btu control would be based on the LNG composition and gas composition requirements of the pipeline markets.

2.8.2 Pipeline System

At this time, Golden Pass has no plans to expand or abandon any of the pipeline system. However, as market conditions evolve, Golden Pass may investigate pipeline expansion opportunities. Should the pipeline system be expanded or abandoned, these facilities would be subject to appropriate FERC authorization and environmental analysis in accordance with applicable federal, state, and local regulations in effect at that time.